LAKE HAVASU CITY, ARIZONA
TANK 2A-06 REHAB/REPLACEMENT

PROJECT NO. WT 6090

JULY 2016

DRAWING INDEX

SHT NO	DWG NO	DESCRIPTION
1	T-1	TITLE, DRAWING INDEX, VICINITY & LOCATION MAPS
2	G-1	GENERAL NOTES
3	D-1	DEMOLITION SITE PLAN – ALTERNATIVE 1 (EXIST TANK REHABILITATION)
4	D-2	DEMOLITION DETAILS – ALTERNATIVE 1
5	D-3	DEMOLITION SITE PLAN – ALTERNATIVE 2 (STEEL TANK REPLACEMENT)
6	D-4	DEMOLITION DETAILS – ALTERNATIVE 2
7	C-1	SITE PLAN – ALTERNATIVE 1
8	C-2	FLOOR PLAN – ALTERNATIVE 1
9	C-3	ALUMINUM AND STEEL ROOF PLANS – ALTERNATIVE 1
10	C-4	SITE PLAN – ALTERNATIVE 2
11	C-5	FLOOR PLAN – ALTERNATIVE 2
12	C-6	ALUMINUM AND STEEL ROOF PLANS – ALTERNATIVE 2
13	CD-1	INLET/OUTLET & INTERCONNECT CONNECTIONS, CONCRETE ENCASEMENT & BACKFILL DETAILS – ALTERNATIVES 1 & 2
14	CD-2	INTERIOR INLET/OUTLET, VALVE BOX, UNDERDRAIN AND SILT PLATE DETAILS – ALTERNATIVES 1 & 2
15	CD-3	EXTERIOR LADDER, SAFTY RAILING AND MISCELLANEOUS DETAILS – ALTERNATIVES 1 & 2
16	CD-4	LEVEL GAUGE, SAMPLE PORT AND OVERFLOW – ALTERNATIVES 1 & 2
17	CD-5	30" DOGHOUSE, 30" MANWAY, VENTS AND MISCELLANEOUS DETAILS – ALTERNATIVES 1 & 2
18	CP-1	CATHODIC PROTECTION SITE PLAN
19	CP-2	CATHODIC PROTECTION DETAILS
20	CP-3	CATHODIC PROTECTION DETAILS
21	E-1	ELECTRICAL SITE PLAN
22	E-2	ELECTRICAL DETAILS

LAKE HAVASU CITY

CITY COUNCIL

MARK NEXSEN	MAYOR
DON CALLAHAN	VICE MAYOR
DEAN BARLOW	COUNCIL MEMBER
DONNA BRISTER	COUNCIL MEMBER
JENI COKE	COUNCIL MEMBER
MICHELE LIN	COUNCIL MEMBER
CAL SHEEHY	COUNCIL MEMBER

CITY MANAGER

CHARLIE CASSENS

PROJECT MANAGER

RYAN MOLHOEK, PE

CITY ENGINEER

GREG FROSLIE, PE

UTILITY CONTACTS

CITY OF LAKE HAVASU CITY (WASTEWATER)	(928) 855-3999
CITY OF LAKE HAVASU CITY (WATER)	(928) 855-2618
NPG CABLE	(928) 855-9855
FRONTIER COMMUNICATION	(928) 453-0541
UNISOURCE ENERGY SERVICES (GAS)	(928) 505-7025
UNISOURCE ENERGY SERVICES (ELECTRIC)	(928) 505-7031

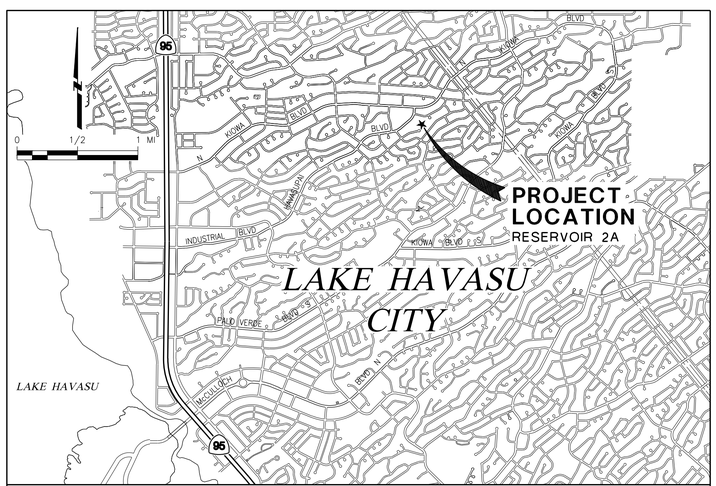

VICINITY MAP

PREPARED BY:

ATKINS

PROJECT NO. 100047996

APPROVALS

ARIZONA DEPARTMENT OF ENVIRONMENTAL QUALITY _____ DATE _____

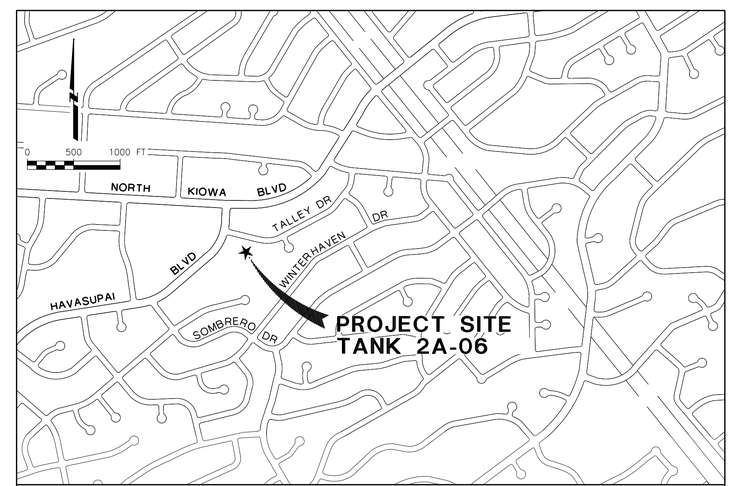

LOCATION MAP

REVISIONS:

LAKE HAVASU CITY

ATKINS

Copyright © Atkins North America, Inc (2014)
4220 CORPORATE CIRCLE, SUITE 200
LAS VEGAS, NV 89114
TEL: +1 (702) 263-7275
FAX: +1 (702) 263-7200
www.atkinsglobal.com

ORIGINAL SCALE: INCHES 0 1 2 3 4

TITLE, DRAWING INDEX, VICINITY & LOCATION MAPS

PROJECT: TANK 2A-06 REHAB/REPLACEMENT
LAKE HAVASU CITY, ARIZONA

DESIGNED BY: RKO/RAW
DRAWN BY: RAW

Registered Professional Engineer (Civil) CERTIFICATE NO. 60207 ROMAN OBZEJTA Date Signed 6-28-16 ARIZONA U.S.A.

EXPIRES 9-11-2018

PROJECT NO. WT6090

DWG NO. T-1

Plotted By: WADE5481 Date: 28-Jun-16-04:21
File: H:\Clients\Lake Havasu\100047996 LHC As Needed\02 TANK-2A\CADD\03-Mst\47996 2A T01.dwg

GENERAL NOTES

1. ALL WATER UTILITY CONSTRUCTION TO CONFORM TO AAC R18-5-502 AND AAC R18-4-119 WATER SYSTEM STANDARDS, ADEQ BULLETIN 10, LAKE HAVASU CITY STANDARDS AND SPECIFICATIONS, MARICOPA ASSOCIATION OF GOVERNMENTS (MAG) STANDARD SPECIFICATIONS (LATEST EDITION) AND DETAILS UNLESS SPECIFICALLY MODIFIED ON THE PLANS.
2. APPROVAL BY THE ENGINEER MEANS FOR GENERAL LAYOUT IN THE RIGHT-OF-WAY ONLY.
3. THE ENGINEER SHALL BE NOTIFIED A MINIMUM OF 24 HOURS PRIOR TO BEGINNING ANY CONSTRUCTION.
4. ANY WORK PERFORMED WITHOUT THE KNOWLEDGE AND APPROVAL BY THE ENGINEER AND/OR ALL WORK MATERIAL NOT IN CONFORMANCE WITH THE PLANS AND SPECIFICATIONS IS SUBJECT TO REMOVAL AND REPLACEMENT AT THE CONTRACTOR'S EXPENSE.
5. NO JOB WILL BE CONSIDERED COMPLETE UNTIL SITE IS CLEAN OF ALL DIRT AND DEBRIS.
6. THE CONTRACTOR SHALL KEEP SUITABLE EQUIPMENT ON HAND AT THE JOBSITE FOR MAINTENANCE DUST CONTROL, AND SHALL CONTROL DUST AS DIRECTED BY THE APPROPRIATE AGENCIES.
7. ALL QUANTITIES SHOWN ON PLANS ARE APPROXIMATE, ARE NOT VERIFIED BY THE ENGINEER, AND ARE FURNISHED SOLELY FOR THE CONTRACTOR'S CONVENIENCE. THEY DO NOT NECESSARILY CORRESPOND TO BID SCHEDULE ITEMS. PAYMENT WILL BE BASED ON BID SCHEDULE ITEMS. THE CONTRACTOR SHALL NOT BE RELIEVED OF HIS RESPONSIBILITY FOR INDEPENDENTLY ESTIMATING WORK QUANTITIES PRIOR TO BIDDING.
8. BACKFILL COMPACTION SHALL BE TYPE 1 (MAG 601) UNLESS OTHERWISE NOTED PER LHC STD DETAILS.
9. ALL PLANS, SIGNED BY THE DESIGN ENGINEER, ARE NULL AND VOID ONE YEAR FROM DATE OF SIGNATURE IF CONSTRUCTION HAS NOT STARTED.
10. CONTRACTOR SHALL BE RESPONSIBLE FOR SUBMITTING TO THE ENGINEER FOR APPROVAL, TRAFFIC CONTROL PLANS WHICH SHALL BE MADE A PART OF THE SUBMITTAL REVIEW REQUEST. THE CONTRACTOR SHALL DETERMINE THE EXACT SIGNING/TRAFFIC CONTROL DEVICES NECESSARY AND ALL TRAFFIC CONTROL WORK SHALL BE IN ACCORDANCE WITH MUTCD AND THE LATEST REVISIONS THEREOF. NO STREET IS TO BE CLOSED, RESTRICTED, OR CONSTRUCTED UPON UNTIL A TRAFFIC PLAN IS PREPARED BY THE CONTRACTOR AND SUBMITTED TO THE ENGINEER 1 WEEK IN ADVANCE FOR REVIEW. APPROPRIATE EMERGENCY AGENCIES SHALL BE NOTIFIED 24 HOURS PRIOR TO ANY CLOSING OF STREETS.
11. CONTRACTOR SHALL WARRANTY ALL WORK FOR A MINIMUM OF A ONE YEAR PERIOD.
12. IT SHALL BE THE CONTRACTOR'S RESPONSIBILITY TO OBTAIN COPIES OF MAG AND THE CITY OF LAKE HAVASU STANDARDS, SPECIFICATIONS, AND DETAILS AS WELL AS ALL OTHER STANDARDS AND SPECIFICATIONS NECESSARY TO COMPLETELY AND ACCURATELY INTERPRET THESE PLANS.
13. REMOVAL OF STRUCTURES AND OBSTRUCTIONS AS NECESSARY TO COMPLETE THE WORK, OTHER THAN SPECIFICALLY SCHEDULED IN THE BID, IS INCIDENTAL TO THE CONTRACT. NO SEPARATE MEASUREMENT OF PAYMENT FOR UNSCHEDULED REMOVAL ITEMS WILL BE MADE.
14. THE CITY OF LAKE HAVASU MAY ORDER ANY OR ALL WORKMANSHIP AND MATERIALS TO BE TESTED ACCORDING TO APPLICABLE STANDARDS.
15. THE CONTRACTOR WILL BE RESPONSIBLE FOR ALL REWORK AND/OR REMOVAL AND REPLACEMENT OF ALL MATERIALS AND/OR WORKMANSHIP REPRESENTED BY A FAILING TEST.
16. THE CONTRACTOR WILL BE RESPONSIBLE FOR ALL COSTS OF TESTING AND QUALITY CONTROL AS DELINEATED IN THE CITY'S PROJECT SPECIFICATIONS. THE COST OF TESTING IS INCIDENTAL TO EACH ITEM OF WORK. THE CONTRACTOR SHALL ALSO BE RESPONSIBLE FOR THE COST OF ANY CITY INSPECTION, AND TIME ASSOCIATED WITH, IF THE CONTRACTOR'S WORK IS BEING PERFORMED IN OVERTIME, AT NIGHT, OR ON WEEKENDS.
17. APPROVAL OF A PORTION OF THE WORK IN PROGRESS DOES NOT GUARANTEE ITS FINAL ACCEPTANCE. TESTING AND EVALUATION MAY CONTINUE UNTIL WRITTEN FINAL ACCEPTANCE OF A COMPLETE AND WORKABLE UNIT.
18. THE CITY OF LAKE HAVASU MAY SUSPEND THE WORK BY WRITTEN NOTICE WHEN, IN ITS JUDGEMENT, PROGRESS IS UNSATISFACTORY, WORK BEING DONE IS UNAUTHORIZED OR DEFECTIVE, WEATHER CONDITIONS ARE UNSUITABLE, OR THERE IS A DANGER TO THE PUBLIC HEALTH OR SAFETY.
19. STREET AND TRAFFIC SIGNS WILL BE RELOCATED BY THE CONTRACTOR. IF NECESSARY, ANY DIRECTION GIVEN BY THE CITY OF LAKE HAVASU SHALL BE INCIDENTAL.
20. CLEARING AND GRUBBING IS CONSIDERED INCIDENTAL TO THE WORK UNLESS SEPARATELY IDENTIFIED IN THE BID SCHEDULE. NO SEPARATE MEASUREMENT OF OR PAYMENT FOR CLEARING, GRUBBING, AND TREE REMOVAL WILL BE MADE. THE SITE OF ALL EXCAVATION, EMBANKMENTS, AND FILLS SHALL FIRST BE CLEARED OF STUMPS, TRASH, WEEDS, RUBBISH, AND LOOSE BOULDERS WHICH SHALL BE REMOVED AND DISPOSED OF. THE CONTRACTOR MUST SATISFY HIMSELF REGARDING THE CHARACTER AND AMOUNT OF LOAM, CLAY, SAND, QUICKSAND, HARDPAN, GRAVEL, ROCK, WATER, AND ALL OTHER MATERIAL TO BE ENCOUNTERED AND WORK TO BE PERFORMED.
21. EDGES OF CONCRETE TO HAVE A 3/4" CHAMFER, UNLESS OTHERWISE SPECIFIED ON PLANS.
22. CONCRETE SURFACES TO HAVE A BROOM FINISH UNLESS OTHERWISE NOTED ON THE PLANS.
23. ALL CONCRETE TO BE AT LEAST 4,000 P.S.I. CLASS 'A' PORTLAND CEMENT CONCRETE UNLESS OTHERWISE SPECIFIED ON PLANS.
24. THE LOCATIONS OF ALL EXISTING UTILITIES SHOWN ARE APPROXIMATE AND ARE BASED ON FIELD DATA AND MAP RECORDS. THE CONTRACTOR SHALL CONTACT 1-800 STAKE-IT PRIOR TO ANY CONSTRUCTION ACTIVITY TO VERIFY THE ACTUAL LOCATION OF ALL UTILITIES. THE CONTRACTOR SHALL DETERMINE WHICH UTILITIES DO NOT PARTICIPATE IN 1-800-STAKE-IT AND CONTACT THEM DIRECTLY TO VERIFY THE LOCATION OF THOSE UTILITIES. ANY DAMAGE TO EXISTING UTILITIES CAUSED BY CONTRACTOR'S OPERATION SHALL BE REPORTED TO THE UTILITY OWNER IMMEDIATELY AND REPAIRED OR REPLACED AT NO COST TO THE CITY. IN CASES WHEN THE EXISTING UTILITIES ARE NOT AS DEPICTED ON THE PLANS SOME MINOR DEVIATION TO THE PROPOSED ALIGNMENT MAY BE ALLOWED TO MAINTAIN MINIMUM SEPARATION DISTANCES BETWEEN UTILITIES. ANY PROPOSED CHANGES TO THE ALIGNMENT MUST BE SUBMITTED TO THE CITY'S REPRESENTATIVE FOR REVIEW. NO CHANGES WILL BE ALLOWED WITHOUT PRIOR APPROVAL.
25. IN ACCORDANCE WITH ARIZONA ADMINISTRATIVE CODE, SECTION R18-4-502, "MINIMUM DESIGN CRITERIA", EXTRA PROTECTION SHALL BE PROVIDED FOR GRAVITY SEWER LINES, FORCE MAIN SEWER LINES, REUSE FORCE MAINS, AND WATER LINES WHERE THE REQUIRED MINIMUM VERTICAL AND HORIZONTAL SEPARATION CAN NOT BE MAINTAINED. ENCASEMENT SHALL BE PROVIDED AS REQUIRED BY ADEQ AND SHALL CONFORM TO THE STANDARD DETAILS PROVIDED. REUSE LINES SHALL BE TREATED AS WATER LINES WHEN IN PROXIMITY TO SEWER LINES AND SHALL BE CONSIDERED SEWER LINES WHEN IN PROXIMITY TO WATER LINES.
26. THE CONTRACTOR SHALL LIMIT THE WORK AREA TO PUBLIC RIGHT-OF-WAY AND PERMANENT EASEMENTS AS SHOWN FOR CONSTRUCTION OF THE PROJECT. TEMPORARY CONSTRUCTION EASEMENTS EXIST AS SHOWN AND INDICATED IN THE PLANS.

GENERAL NOTES (CONT):

27. CONTRACTOR SHALL OBTAIN ANY ADDITIONAL TEMPORARY EASEMENTS OR USE AGREEMENTS THAT ARE DEEMED NECESSARY FOR CONSTRUCTION AT NO ADDITIONAL COST TO THE CITY. COPIES OF ALL CONTRACTOR OBTAINED EASEMENTS AND USE AGREEMENTS SHALL BE PROVIDED TO THE CITY'S REPRESENTATIVE PRIOR TO THE UTILIZATION OF THE SITE.
28. ALL EXISTING FLOW LINES AND PIPING LOCATIONS SHOWN ARE APPROXIMATE AND SHALL BE FIELD VERIFIED BY CONTRACTOR.
29. THE CONTRACTOR SHALL GRADE AND RESURFACE ALL AREAS DISTURBED BY CONSTRUCTION. IN ACCORDANCE WITH THE SPECIFICATIONS AND TO A CONDITION EQUAL TO, OR BETTER THAN, THE PRE-CONSTRUCTION CONDITION.
30. THE CONTRACTOR SHALL PROVIDE PROTECTION TO PREVENT UNDERMINING OR DAMAGING THE STRUCTURAL INTEGRITY OF EXISTING RESERVOIRS, ALL POWER POLES, FENCES, BLOCK WALLS, SCREEN WALLS, RETAINING WALLS, HIGHWAY AND STREET SIGNS, OTHER UTILITY POLES, OR OTHER PRIVATE OR PUBLIC IMPROVEMENTS WITHIN THE PROJECT AREA. THE CONTRACTOR SHALL MAKE ARRANGEMENTS WITH THE OWNING UTILITY AS NECESSARY TO PROVIDE TEMPORARY SUPPORT OR PROTECTION DURING CONSTRUCTION WORK, AND SHALL NEATLY REMOVE AND PROMPTLY REPLACE NON UTILITY IMPROVEMENTS WITHOUT UNDUE DISRUPTION. THE COST OF ALL SUCH PROTECTION, REMOVAL, AND REPLACEMENT REQUIRED TO COMPLETE THE PROJECT SHALL BE SUBSIDIARY TO OTHER BID ITEMS.
31. THE CONTRACTOR SHALL TAKE ALL APPROPRIATE STEPS TO MAINTAIN CONTINUOUS UTILITY SERVICE TO RESIDENTS AND BUSINESSES WITHIN THE PROJECT AREA. MANY EXISTING WATER AND GAS LINES ARE MORE THAN 30 YEARS OLD, PROPOSED METHOD OF CROSSING AND/OR SUPPORT OF UTILITIES SHALL BE APPROVED BY UTILITY OWNER IN ADVANCE OF WORK. MANY LOCAL WATER LINES ARE CONSTRUCTED OF ASBESTOS CEMENT. GAS LINES ARE REPORTED TO BE BRITTLE, SO CLOSE COORDINATION WITH THE UTILITY OWNER'S WILL BE NECESSARY TO AVOID DAMAGE. PROTECTION OF ALL UTILITIES IS THE RESPONSIBILITY OF THE CONTRACTOR.
32. ALL GRAVEL DRIVES AND GRAVEL ROADS DISTURBED DURING CONSTRUCTION SHALL BE REPLACED WITH A MINIMUM OF SIX INCHES (6") OF GRANULAR BACKFILL AS SPECIFIED IN SECTION 02300 AND SHALL BE CONSIDERED SUBSIDIARY TO OTHER PAY ITEMS.
33. THE CONTRACTOR SHALL REMOVE ALL FENCING, ASPHALT AND CONCRETE ROADS AND DRIVEWAYS, CURB AND GUTTER, RIP-RAP, LANDSCAPING, DRAINAGE CULVERTS, LANDSCAPING AND ASSOCIATED APPURTENANCES AS REQUIRED FOR CONSTRUCTION PURPOSES. ALL ITEMS DAMAGED, REMOVED, OR DISTURBED SHALL BE RESTORED IN ACCORDANCE WITH THE SPECIFICATION TO A CONDITION EQUAL TO, OR BETTER THAN, THEIR CONDITION PRIOR TO THE START OF THE PROJECT. ITEMS OF WORK NOT SPECIFICALLY INCLUDED IN THE MEASUREMENTS AND PAYMENT SECTION OF THE SPECIFICATIONS SHALL BE CONSIDERED SUBSIDIARY TO OTHER BID ITEMS AND SHALL NOT BE PAID FOR SEPARATELY.
34. THE CONTRACTOR SHALL TAKE APPROPRIATE STEPS TO PREVENT EROSION OF MATERIAL FROM THE WORK AREA AND DEPOSITION OF SEDIMENTS INTO WATER COURSES OR DRAINAGE SWALES. THE CONTRACTOR SHALL SUBMIT AN EROSION CONTROL PLAN PRIOR TO THE START OF ANY EXCAVATION. ALL EROSION AND SEDIMENT CONTROL WORK SHALL BE INCIDENTAL TO OTHER PAY ITEMS.
35. ALL STREET CENTERLINES HAVE EXISTING PINS AT THE INTERSECTION OF THE STREET CENTERLINES AND POINTS OF CURVATURE AND TANGENCY. CONTRACTOR SHALL ARRANGE AND PAY FOR AN ARIZONA REGISTERED LAND SURVEYOR TO DETERMINE THE COORDINATES FOR EACH PIN PRIOR TO CONSTRUCTION AND TO REPLACE THE PINS WITH 1/2" X 3/8" MAG NAIL WITH WASHER AND SURVEYOR INFORMATION STAMPED ON WASHER TO THE SAME LOCATION AFTER RESURFACING. ALL REQUIRED SURVEY WORK SHALL BE THE RESPONSIBILITY OF THE CONTRACTOR AND WILL BE SUBSIDIARY TO OTHER PAY ITEMS. ALL EXISTING LAND SURVEY MONUMENTATION SHALL BE PROVIDED OR REPLACED BY A REGISTERED LAND SURVEYOR IF DAMAGED.
36. ALL REUSE AND WATER LINES SHALL BE PVC C-900 PIPE, UNLESS OTHERWISE NOTED ON PLANS.
37. LOCATION OF RIGHT-OF-WAY RELATIVE TO AERIAL PHOTOS INDICATED ON DRAWINGS MAY NOT MATCH FIELD CONDITIONS. AT ALL TIMES, CONTRACTOR SHALL MAINTAIN ADEQUATE REQUIRED MINIMUM SPACING FROM OTHER UTILITIES.
38. ANY ROCK ENCOUNTERED DURING EXCAVATION SHALL BE REMOVED AT NO ADDITIONAL COST TO LAKE HAVASU CITY. ROCK EXCAVATION COST SHALL BE INCIDENTAL TO OTHER ITEMS OF WORK.
39. ANY SHORING REQUIRED SHALL BE CONSIDERED INCIDENTAL TO OTHER ITEMS OF WORK.
40. CONTRACTOR SHALL SCHEDULE WATER SHUTDOWNS AND SEWER WORK SO AS TO NOT DISRUPT SERVICE TO SCHOOLS, HOSPITALS, DAY CARE FACILITIES, ETC. IN ACCORDANCE WITH ARIZONA STATE LAW.
41. IT IS NOT THE INTENTION OF THE SPECIFICATIONS TO SUPERSEDE ANY FEDERAL, STATE OR LOCAL LAWS, REGULATIONS AND/OR ORDINANCES; THEY SHALL GOVERN IN ALL INSTANCES. IT IS THE CONTRACTOR'S RESPONSIBILITY TO SHOW A GOOD FAITH EFFORT AND TO PROTECT ALL EXISTING UTILITIES AND STRUCTURES AND TO ABIDE BY ALL FEDERAL, STATE AND LOCAL LAWS AND ORDINANCES IN THIS RESPECT.
42. PROPERTY LINES SHOWN ON DRAWINGS ARE APPROXIMATE.
43. CONTRACTOR SHALL VERIFY ALL QUANTITIES PRIOR TO CONSTRUCTION.
44. ALL VALVES SHALL BE ADJUSTED TO FINISH GRADE WITH CONCRETE COLLAR PER DETAIL 3 DRAWING CD-2.
45. THE CONTRACTOR SHALL COORDINATE ALL REQUIRED SHUT-DOWN ACTIVITIES WITH THE CITY. ALL REQUESTS SHALL BE WRITTEN AND SUBMITTED 2 WEEKS PRIOR TO THE PROPOSED SHUT-DOWN AND MEET REQUIREMENTS DEFINED IN THE SPECIFICATIONS.
46. EXISTING WATER MAIN AND APPURTENANCES TO BE REMOVED SHALL BE SALVAGED OR DISPOSED OF BY CONTRACTOR IN ACCORDANCE WITH SECTION 02050 OF THE PROJECT SPECIFICATIONS.
47. ALL DUCTILE IRON FITTINGS, JOINT RESTRAINTS, VALVES AND DUCTILE IRON PIPES LOCATED UNDERGROUND SHALL BE DOUBLE POLY WRAPPED AND TAPED.

GENERAL NOTES (CONT):

48. ALL LANDSCAPING AND HARDSCAPING DISTURBED SHALL BE REPLACED AT EQUAL OR BETTER CONDITION THAN EXISTING.
49. CONTRACTOR SHALL VERIFY AHEAD OF EXCAVATING THAT MINIMUM CLEARANCE IS AVAILABLE BETWEEN SEWER, LATERALS, WATER MAIN AND OTHER UTILITIES AND MAKE ADJUSTMENTS AS NEEDED. NO EXTRA PAYMENT SHALL BE MADE FOR EXTRA EXCAVATION, ADJUSTMENTS, LOWERINGS, ETC. NECESSARY FOR MAINTAINING PROPER SEPARATION FROM ANY UTILITY. THIS WORK SHALL BE INCIDENTAL TO INSTALLATION OF THE WATERLINE.
50. CONTRACTOR SHALL PERFORM ALL TESTING AND DISINFECTING OF THE WATER LINES PER THE LHC STANDARD SPECIFICATIONS SECTION 02550, AND THE ARIZONA DEPARTMENT OF ENVIRONMENTAL QUALITY (ADEQ) REGULATIONS IN BULLETIN NO. 8.
51. WATER TANKS SHALL BE TESTED IN CONFORMANCE IN AWWA D100 LATEST EDITION AND DISINFECTED IN ACCORDANCE WITH PROJECT SPECIFICATIONS SECTION 13211.
52. ALL WATER MAINS SHALL BE BURIED WITH 12 GAUGE DIRECT BURY TRACE WIRE.
53. EXACT LOCATION OF EXISTING PIPES & CONNECTION POINTS ARE UNKNOWN. CONTRACTOR SHALL EXPOSE EXISTING PIPING AT EACH CONNECTION POINT TO VERIFY THE LOCATION AND ELEVATION PRIOR TO ORDERING OR MANUFACTURING PIPE OR FITTINGS. THE CONTRACTOR SHALL PROVIDE THIS INFORMATION TO THE CITY FOR REVIEW AND MAKE NECESSARY ADJUSTMENTS IN PIPELINE LAYOUT, IF REQUIRED. THIS SHALL BE CONSIDERED DURING BID PROCESS AND NO ADDITIONAL PAYMENT WILL BE ALLOWED.
54. ALL PIPE, FITTINGS, FIRE HYDRANTS & OTHER APPURTENANCES IN DIRECT CONTACT WITH POTABLE WATER SHALL BE NATIONAL SANITATION FOUNDATION (NSF) 61 CERTIFIED.
55. PVC PIPE USED FOR WATER WORKS SHALL BEAR THE NSF SEAL FOR POTABLE WATER USE (NSF-PW).
56. PROJECT LOCATED ENTIRELY WITHIN FEMA ZONE X.
57. ALL WATER MAINS SHALL BE BURIED WITH WATER CAUTION TAPE.
58. ANY REUSABLE MATERIALS GENERATED DURING THE WORK, SUCH AS AGGREGATE, CRUSHED ROCK, TOPSOIL, SHALL BE SEGREGATED FROM OTHER WASTE MATERIALS AND BE STOCKPILED SO AS TO MAINTAIN SUITABILITY AND PERMIT REUSE.
59. THE CONTRACTOR SHALL BE RESPONSIBLE FOR SITE SECURITY DURING CONSTRUCTION. SEE SPECIFICATION SECTION 01610.
60. ALL CML&C STEEL PIPE SHALL BE STANDARD WEIGHT, UNLESS OTHERWISE INDICATED ON THE PLANS.
61. SHOP DRAWINGS FOR CML&C STEEL PIPE SHALL BE SUBMITTED AND APPROVED BY THE ENGINEER PRIOR TO FABRICATION.
62. ONLY POTABLE WATER SHALL BE USED FOR FILLING, FLASHING AND TESTING OF PIPE AND TANK.

SURVEY NOTES:

1. THERE IS NO SURVEY CONTROL FOR THE PROJECT SITE. FOR CONSTRUCTION ALTERNATIVE 2, CONTRACTOR SHALL SURVEY AND RECORD LOCATION OF THE EXISTING TANK 2A AND TANK'S BOTTOM ELEVATION. THE NEW TANK SHALL BE LOCATED IN THE SAME PLACE, AND THE TOP OF CONCRETE FOOTING FOR NEW TANK SHALL HAVE THE SAME ELEVATION AS ELEVATION OF THE BOTTOM OF THE EXISTING TANK 2A-06. THE ELEVATION OF THE TANK 2A-06 BOTTOM SHALL BE TAKEN AT THE TANK'S ACCESS LADDER.

ABBREVIATIONS:

ABAND, ABDN	ABANDON(ED)
AC	ASBESTOS CEMENT, ASPHALT CONCRETE
ALT	ALTERNATIVE
APPROX	APPROXIMATE
ASSY	ASSEMBLY
AWWA	AMERICAN WATER WORKS ASSOCIATION
CLSM	CONTROLLED LOW STRENGTH MATERIAL
CML&C	CEMENT MORTAR LINED AND COATED
CONC.	CONCRETE
CP	CATHODIC PROTECTION
DET	DETAIL
DI	DUCTILE IRON
DWG	DRAWING
ELEV	ELEVATION
FLG	FLANGE
FG	FINISH GRADE
L	LENGTH
LF	LINEAR FEET
MAG	MARICOPA ASSOCIATION OF GOVERNMENTS
MFR	MANUFACTURE
OPNG	OPENING
OC	ON CENTER
POC	POINT OF CONNECTION
PTFE	POLYTETRAFLUOROETHYLENE
RAD	RADIALLY
REQ	REQUIRED
SCHED	SCHEDULE
SE	SAND EQUIPMENT
SLP	SLOPE
SPEC	SPECIFICATION(S)
SQ	SQUARE
SST	STAINLESS STEEL
STA	STATION
STD	STANDARD
VB	VALVE BOX

REVISIONS:

LAKE HAVASU CITY

ATKINS

Copyright © Atkins North America, Inc (2014)
2270 CORPORATE CIRCLE, SUITE 200
HENDERSON, NV 89074
TEL: +1 (702) 263-7275
FAX: +1 (702) 263-7200
www.atkinsglobal.com

GENERAL NOTES

PROJECT: TANK 2A-06 REHAB/REPLACEMENT
LAKE HAVASU CITY, ARIZONA

DESIGNED BY: RKO/RAW
DRAWN BY: RAW

EXPIRES 9-11-2018

PROJECT NO. WT6090

DWG NO. G-1

ORIGINAL SCALE: INCHES 0 1 2 3

Plotted By: WADE5481 Date: 28-Jun-16-04:24
File: H:\Clients\Lake Havasu\100047996 LHC As Needed\02 TANK-2A\CADD\03-Mst\47996 2A G01.dwg

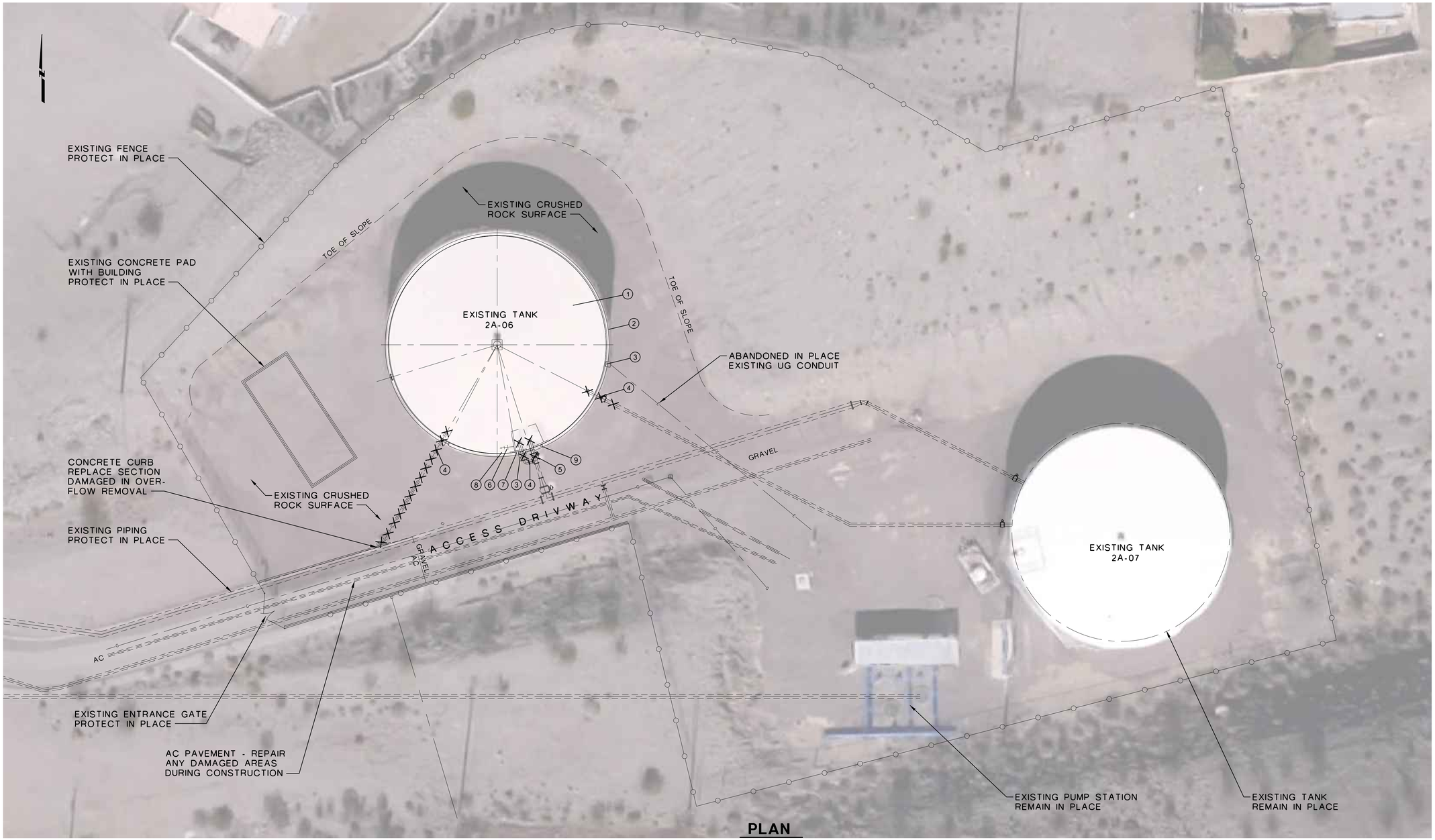

PLAN
1"=20'

DEMOLITION SCHEDULE (ALT 1)

1. REMOVE TANK'S STEEL ROOF AND FLOOR, SEE DEMO DETAILS FOR EXTENT OF REMOVAL
2. PROTECT IN PLACE EXISTING STEEL RETAINING RING
3. EXISTING RTU CABINET - TO BE RELOCATED BY THE CITY FORCES PRIOR TO CONSTRUCTION.
4. REMOVE PIPING, SEE DEMOLITION DETAILS FOR EXTENT OF REMOVAL.
5. REMOVE INTERIOR AND EXTERIOR LADDERS
6. EXISTING SCADA ANTENNA - TO BE RELOCATED BY THE CITY FORCES PRIOR TO CONSTRUCTION.
7. REMOVE TANK LEVEL PRESSURE TRANSDUCER, SALVAGE TO CITY. PROVIDE NEW PRESSURE TRANSDUCER AND CONNECTION UPON COMPLETION OF CONSTRUCTION.
8. REMOVE WATER LEVEL INDICATOR
9. REMOVE RECTIFIER FOR IMPRESSED CURRENT CORROSION PROTECTION SYSTEM AND SALVAGE TO THE CITY. SEE SPECS SECTION 13111 FOR ADDITIONAL INFORMATION REGARDING CORROSION PROTECTION SYSTEM FOR ALTERNATIVE 1.

DEMOLITION NOTES

1. SEE SPECIFICATIONS SECTION 2050 FOR ADDITIONAL INFORMATION.
2. CONTRACTOR SHALL BE RESPONSIBLE FOR DISPOSAL OF ALL ITEMS REMOVED. DISPOSAL SHALL BE PER ALL APPLICABLE LOCAL, STATE AND FEDERAL LAWS.
3. CONTRACTOR SHALL COORDINATE WITH THE CITY ON DELIVERY OF SALVAGED ITEMS.

LEGEND

XXXXX ITEM TO BE REMOVED

0 20 40 60
SCALE: 1" = 20'

REVISIONS:

LAKE HAVASU CITY

ATKINS

Copyright © Atkins North America, Inc (2014)
2270 CORPORATE CIRCLE, SUITE 200
HENDERSON, NV 89074
TEL: +1 (702) 263-7275
FAX: +1 (702) 263-7200
www.atkinsglobal.com

ORIGINAL SCALE: 0 1 2 3 4 INCHES

DEMOLITION SITE PLAN
ALTERNATIVE 1 (EXIST TANK REHABILITATION)

PROJECT:
TANK 2A-06 REHAB/REPLACEMENT
LAKE HAVASU CITY, ARIZONA

DESIGNED BY: RKO/RAW
DRAWN BY: RAW

Registered Professional Engineer (Civil)
CERTIFICATE NO. 60707
ROMAN KOZYRA
Date Signed 9-11-16
ARIZONA U.S.A.
EXPIRES 9-11-2018

PROJECT NO.
WT6090

DWG NO.
D-1
3 OF 22

Plotted By: WADE5481 Date: 28-Jun-16-11:29
File: H:\Clients\Lake Havasu\100047996 LHC As Needed\02 TANK-2A\CADD\03-Mst\47996 2A D01.dwg

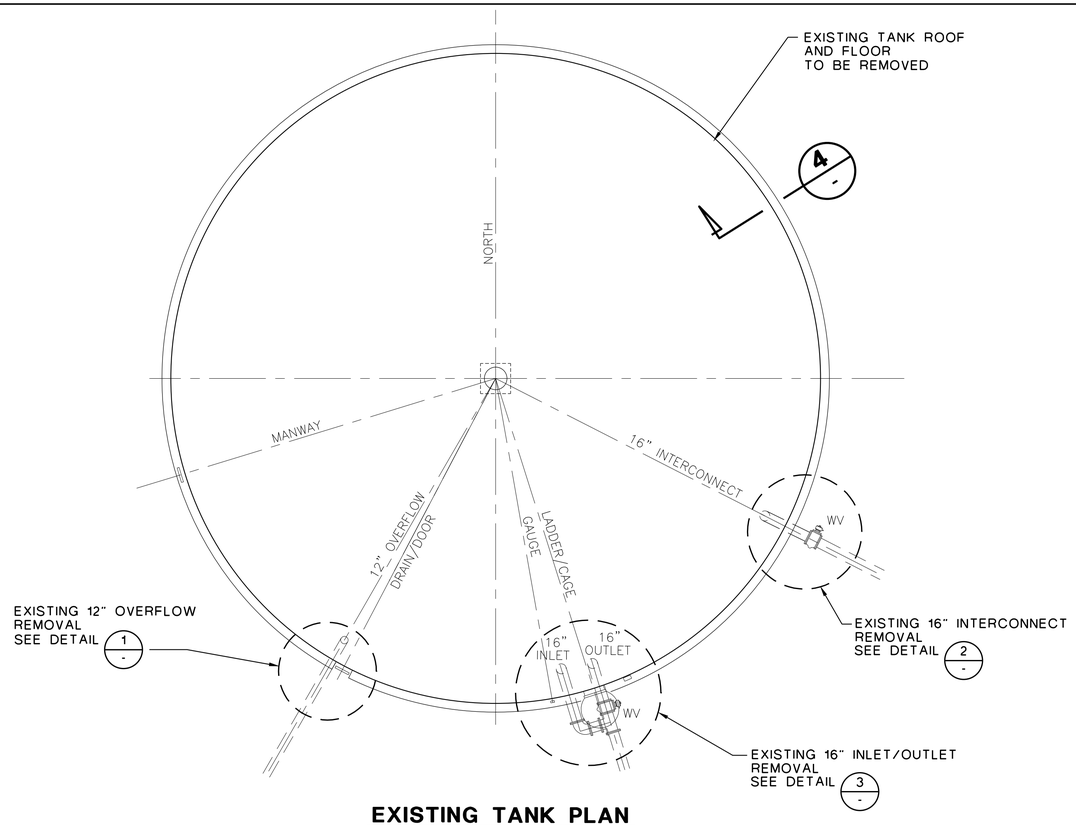

EXISTING TANK PLAN

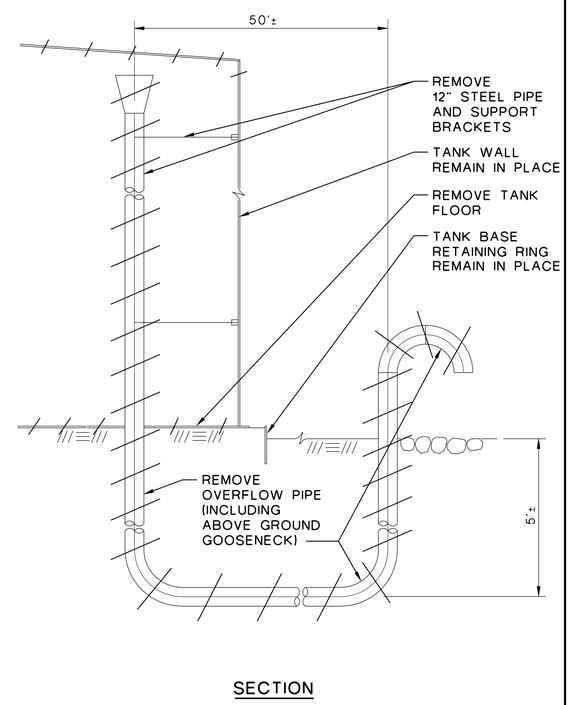

SECTION

EXISTING 12" OVERFLOW REMOVAL

DETAIL 1
1/4"=1'-0"

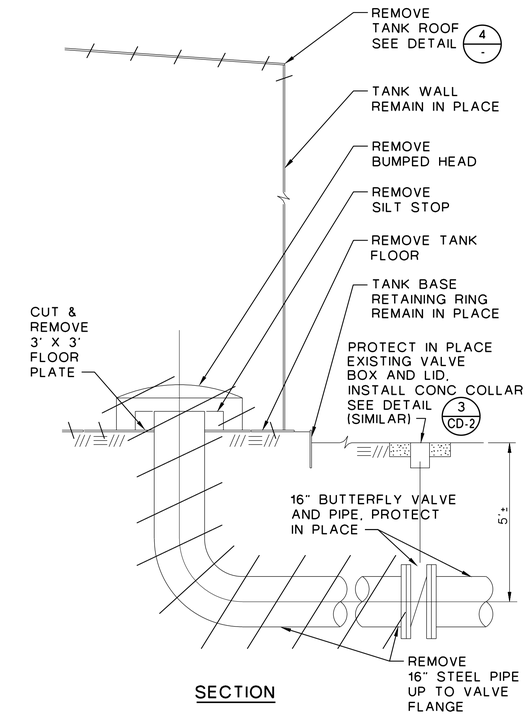

SECTION

EXISTING 16" INTERCONNECT REMOVAL

DETAIL 2
1/2"=1'-0"

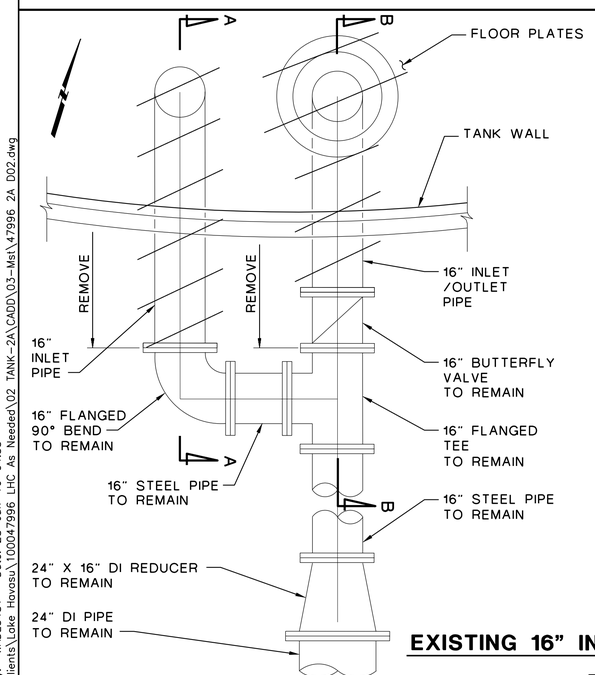

PLAN

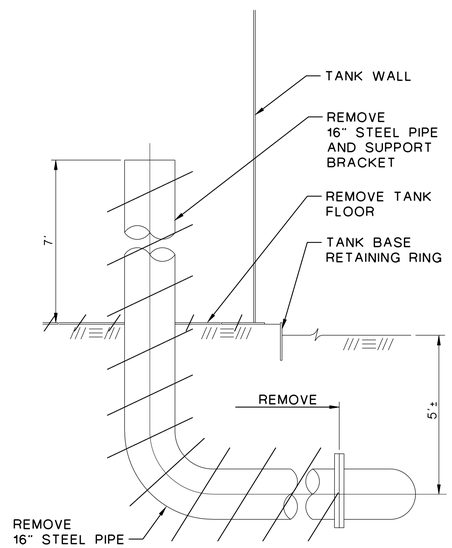

16" INLET SECTION A-A

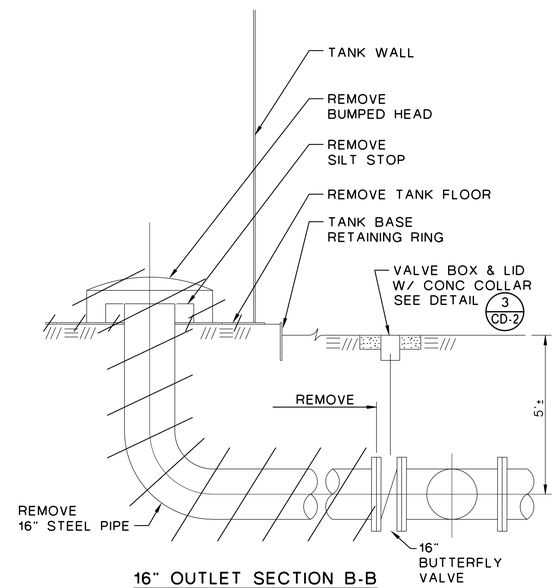

16" OUTLET SECTION B-B

EXISTING 16" INLET/OUTLET REMOVAL (ALT 1)

DETAIL 3
1/2"=1'-0"

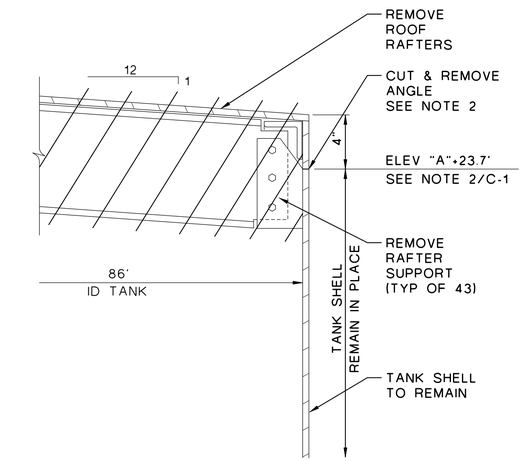

NOTES:
1. SEE DWG C-3 FOR NEW ROOF CONSTRUCTION AND ELEVATIONS.
2. SEPARATE EXISTING STEEL ROOF FROM SHELL 1" BELOW ANGLE SUPPORTING PLATE.

SECTION

EXISTING ROOF REMOVAL

DETAIL 4
2"=1'-0"

REVISIONS:

LAKE HAVASU CITY

ATKINS
Copyright © Atkins North America, Inc (2014)
4222 E. CORPORATE CIRCLE, SUITE 200
PHOENIX, ARIZONA 85034
TEL: +1 (702) 263-7275
FAX: +1 (702) 263-7200
www.atkinsglobal.com

ORIGINAL SCALE: 1" (INCHES)

DEMOLITION DETAILS
ALTERNATIVE 1

PROJECT:
TANK 2A-06 REHAB/REPLACEMENT
LAKE HAVASU CITY, ARIZONA

DESIGNED BY: RKO/RAW
DRAWN BY: RAW

Registered Professional Engineer (Civil) CERTIFICATE NO. 60797 ROMAN, DOUGLAS A. ARIZONA U.S.A.
EXPIRES 9-11-2018

PROJECT NO.
WT6090

DWG NO.
D-2
4 OF 22

Plotted By: WADE5481 Date: 28-Jun-16-04:33
File: H:\Clients\Lake Havasu\100047996 LHC As Needed\02 TANK-2A\CADD\03-Mst\47996 2A D02.dwg

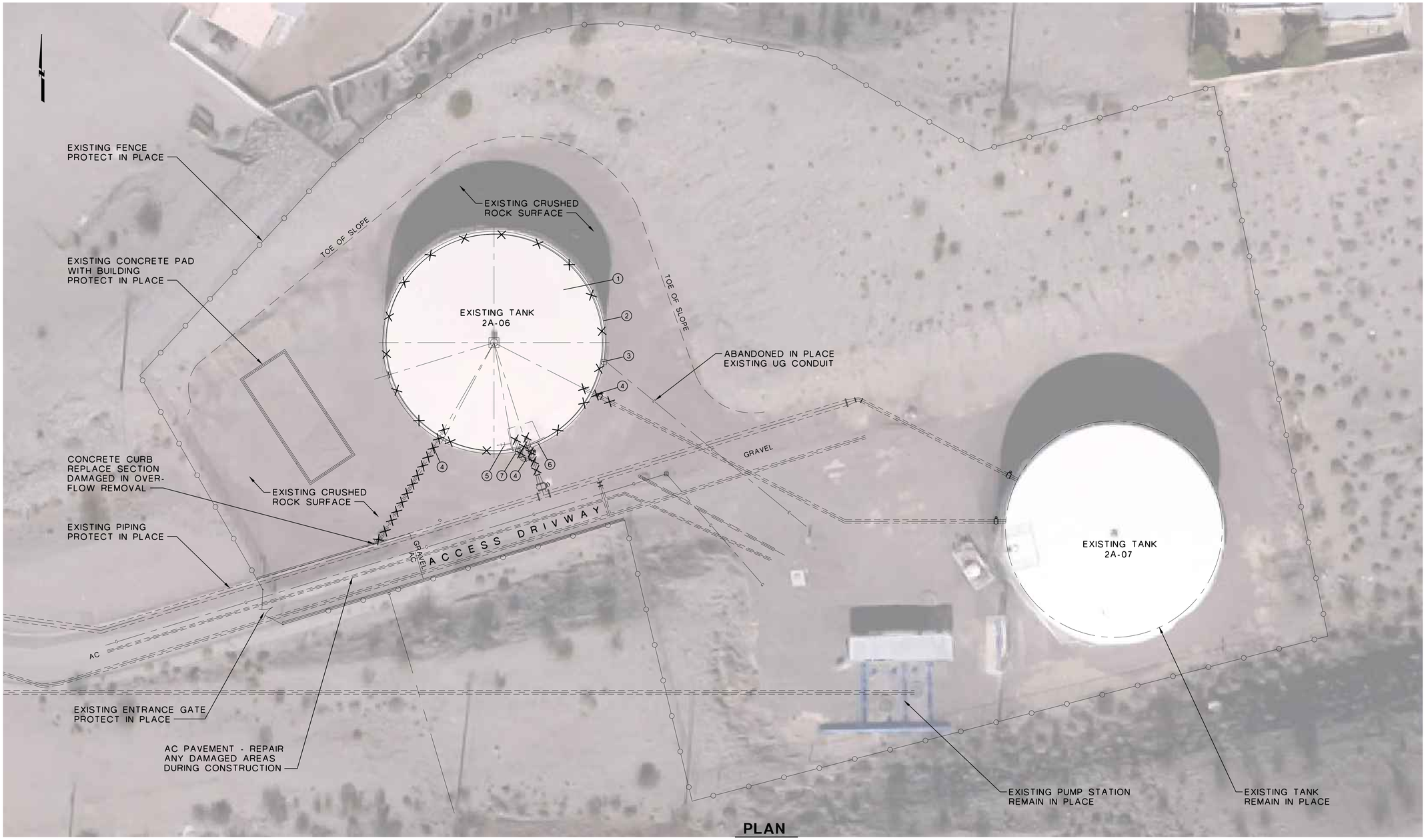

PLAN
1":20'

DEMOLITION SCHEDULE (ALT 2)

1. REMOVE STEEL TANK AND APPURTENANCES (86 FT DIA, 24 FT HIGH)
2. REMOVE STEEL RETAINING RING
3. EXISTING RTU CABINET - TO BE RELOCATED BY CITY FORCES PRIOR TO CONSTRUCTION.
4. REMOVE PIPING, SEE DEMOLITION DETAILS FOR EXTENT OF REMOVAL
5. EXISTING SCADA ANTENNA - TO BE RELOCATED BY THE CITY FORCES PRIOR TO CONSTRUCTION
6. REMOVE TANK LEVEL PRESSURE TRANSDUCER, SALVAGE TO CITY. PROVIDE NEW PRESSURE TRANSDUCER AND CONNECTION UPON COMPLETION OF CONSTRUCTION.
7. REMOVE IMPRESSED CURRENT RECTIFIER (FOR CORROSION PROTECTION SYSTEM) AND SALVAGE TO THE CITY. SEE SPECS SECTION 13110 FOR ADDITIONAL INFORMATION REGARDING CORROSION PROTECTION SYSTEM FOR ALTERNATIVE 2.

DEMOLITION NOTES

1. SEE SPECIFICATIONS SECTION 2050 FOR ADDITIONAL INFORMATION.
2. CONTRACTOR SHALL BE RESPONSIBLE FOR DISPOSAL OF ALL ITEMS REMOVED. DISPOSAL SHALL BE PER ALL APPLICABLE LOCAL, STATE AND FEDERAL LAWS.
3. CONTRACTOR SHALL COORDINATE WITH THE CITY ON DELIVERY OF SALVAGED ITEMS.

LEGEND

XXXXX ITEM TO BE REMOVED

0 20 40 60
SCALE: 1" = 20'

REVISIONS:

LAKE HAVASU CITY

ATKINS

Copyright © Atkins North America, Inc (2014)
2270 CORPORATE CIRCLE, SUITE 200
HENDERSON, NV 89074
TEL: +1 (702) 263-7275
FAX: +1 (702) 263-7200
www.atkinsglobal.com

ORIGINAL SCALE: 0 1" 2" 3" 4" INCHES

DEMOLITION SITE PLAN
ALTERNATIVE 2 (STEEL TANK REPLACEMENT)

PROJECT:
TANK 2A-06 REHAB/REPLACEMENT
LAKE HAVASU CITY, ARIZONA

DESIGNED BY: RKO/RAW
DRAWN BY: RAW

Registered Professional Engineer (Civil)
CERTIFICATE NO. 68707
ROMAN K. OSZEJDA
Date Signed 9-11-2018
ARIZONA U.S.A.
EXPIRES 9-11-2018

PROJECT NO.
WT6090

DWG NO.
D-3
5 OF 22

Plotted By: WADE5481 Date: 28-Jun-16-11:31
File: H:\Clients\Lake Havasu\100047996 LHC As Needed\02 TANK-2A\CADD\03-Mst\47996 2A D03.dwg

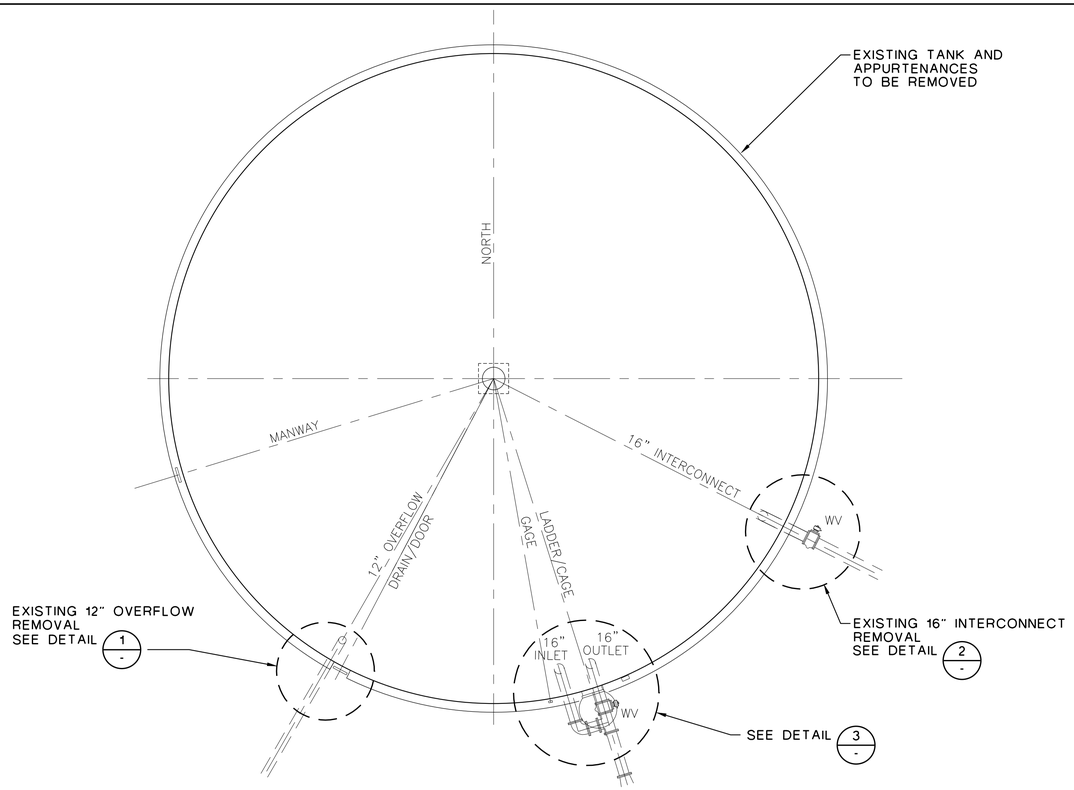

EXISTING TANK PLAN

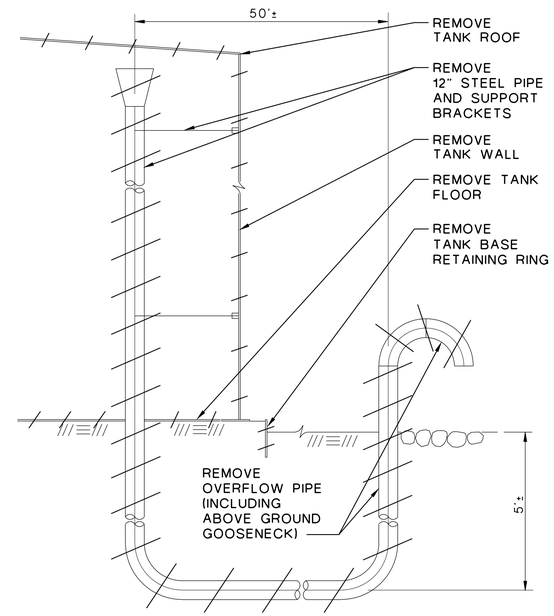

SECTION

EXISTING 12" OVERFLOW REMOVAL

DETAIL 1 -

1/4":1'-0"

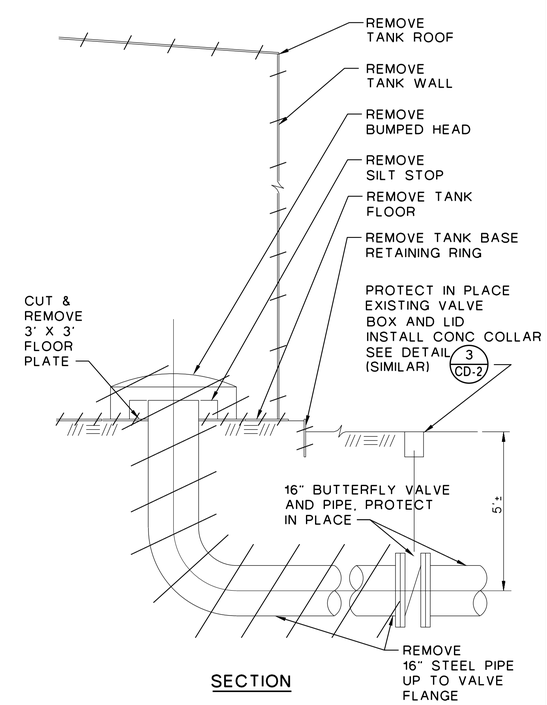

SECTION

EXISTING 16" INTERCONNECT REMOVAL

DETAIL 2 -

1/2":1'-0"

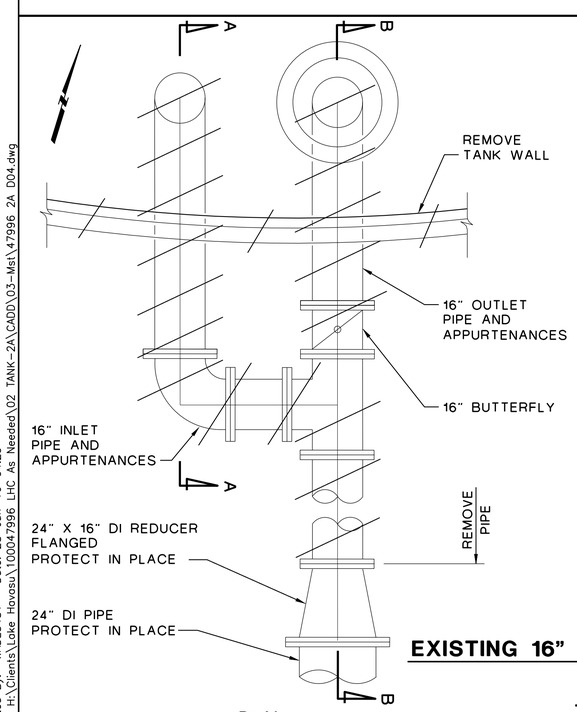

PLAN

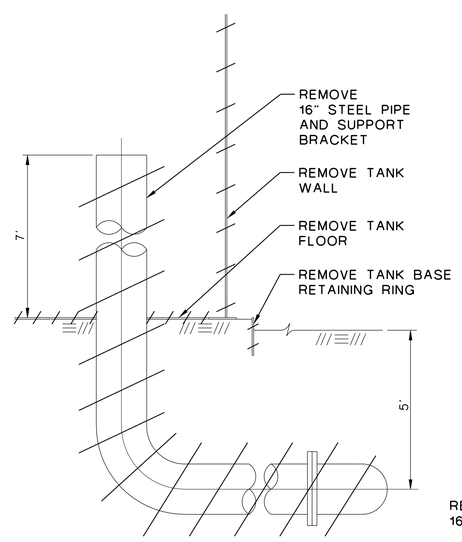

16" INLET SECTION A-A

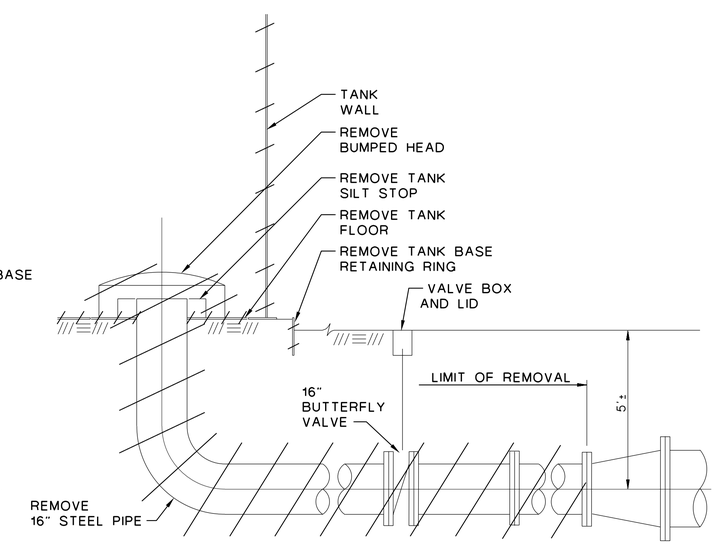

16" OUTLET SECTION B-B

EXISTING 16" INLET/OUTLET REMOVAL (ALT 2)

DETAIL 3 -

1/2":1'-0"

REVISIONS:

LAKE HAVASU CITY

ATKINS

Copyright © Atkins North America, Inc (2014)
4220 CORPORATE CIRCLE, SUITE 200
ROCKLEDGE, FLORIDA 32955
TEL: +1 (702) 263-7275
FAX: +1 (702) 263-7200
www.atkinsglobal.com

ORIGINAL SCALE: 1" INCHES

DEMOLITION DETAILS ALTERNATIVE 2

PROJECT: TANK 2A-06 REHAB/REPLACEMENT
LAKE HAVASU CITY, ARIZONA

DESIGNED BY: RKO/RAW
DRAWN BY: RAW

Registered Professional Engineer (Civil) CERTIFICATE NO. 60707 ROMAN KOSECKI Date Signed 6-28-16 ARIZONA U.S.A.

EXPIRES 9-11-2018

PROJECT NO. WT6090

DWG NO. D-4

Plotted By: WADE5481 Date: 28-Jun-16-04:29
File: H:\Clients\Lake Havasu\100047996 LHC As Needed\02 TANK-2A\CADD\03-Mst\47996 2A D04.dwg

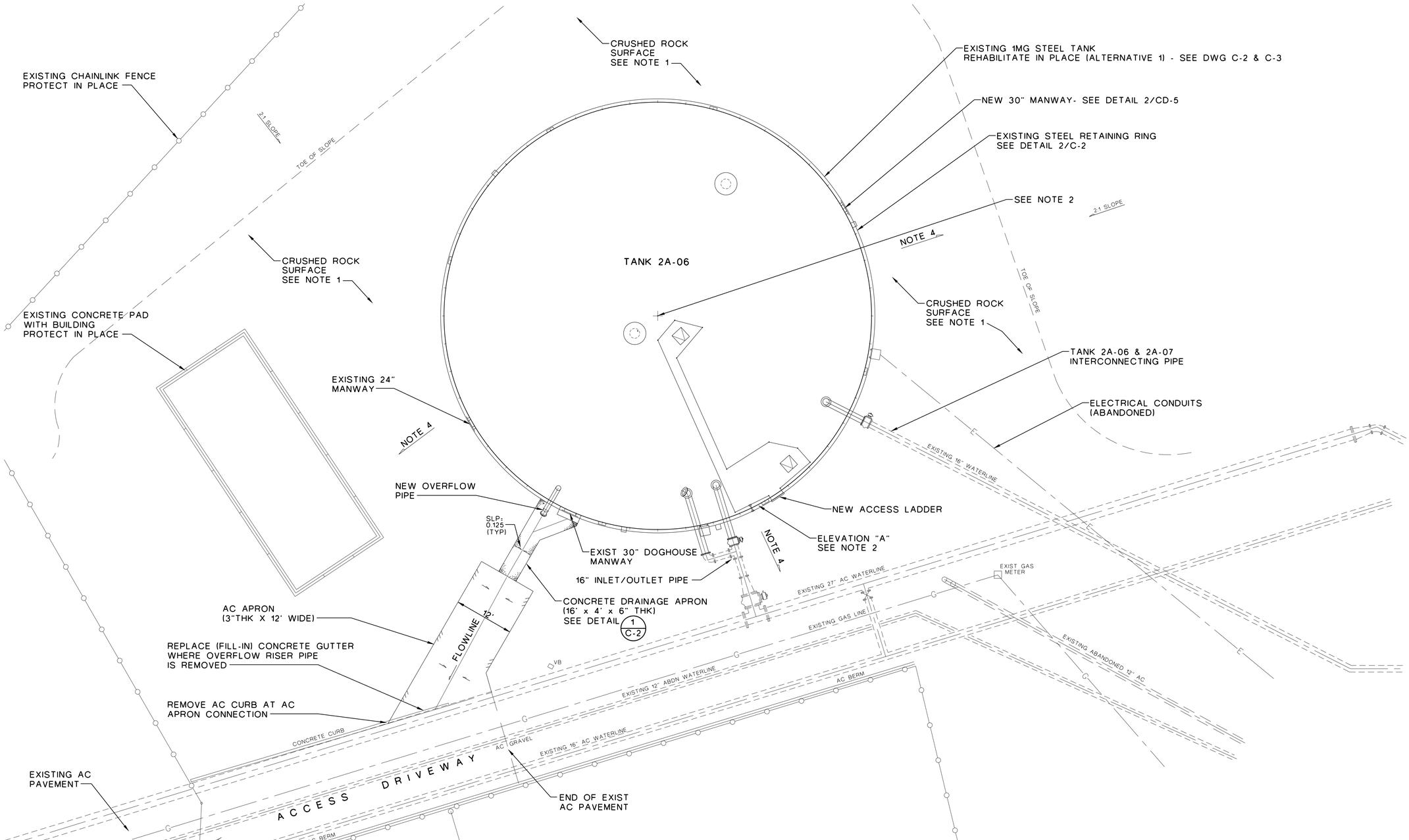

PLAN

1"=10'

NOTES:

1. REPLACE CRUSHED ROCK DISTURBED DURING CONSTRUCTION TO A DEPTH OF 3" MINIMUM. PROVIDE NEW CRUSHED ROCK IF NEEDED. CRUSHED ROCK GRADATION 3/4" MINUS.
2. THERE IS NO SURVEY CONTROL FOR THE PROJECT SITE. FOR CONSTRUCTION OF ALTERNATIVE 1, CONTRACTOR SHALL SURVEY AND RECORD LOCATION OF THE EXISTING TANK 2A AND TANK'S BOTTOM ELEVATION. THE ELEVATION OF THE TANK 2A-06 BOTTOM SHALL BE TAKEN AT THE TANK'S ACCESS LADDER. THIS ELEVATION IS REFERENCED AS ELEVATION "A" IN THE PLANS.
3. SEE DRAWINGS C-2 AND C-3 FOR IMPROVEMENTS SPECIFIC TO ALTERNATIVE 1.
4. GRADE EXISTING GROUND AWAY FROM TANK FOUNDATION.

0 10 20 30
SCALE: 1" = 10'

REVISIONS:

LAKE HAVASU CITY

ATKINS

Copyright © Atkins North America, Inc (2014)
2270 CORPORATE CIRCLE, SUITE 200
HENDERSON, NV 89074
TEL: +1 (702) 263-7275
FAX: +1 (702) 263-7200
www.atkinsglobal.com

ORIGINAL SCALE: 0 1 2 3 4 INCHES

SITE PLAN
ALTERNATIVE 1

PROJECT:
TANK 2A-06 REHAB/REPLACEMENT
LAKE HAVASU CITY, ARIZONA

DESIGNED BY: RKO/RAW
DRAWN BY: RAW

Registered Professional Engineer (Civil)
CERTIFICATE NO. 60797
Rowan A. Osborn
Date Signed 6-28-16
ARIZONA U.S.A.

EXPIRES 9-11-2018

PROJECT NO.
WT6090

DWG NO.
C-1
7 OF 22

Plotted By: WADE5481 Date: 28-Jun-16-04:35
File: H:\Clients\Lake Havasu\100047996 LHC As Needed\02 TANK-2A\CADD\03-Mst\47996 2A C01.dwg

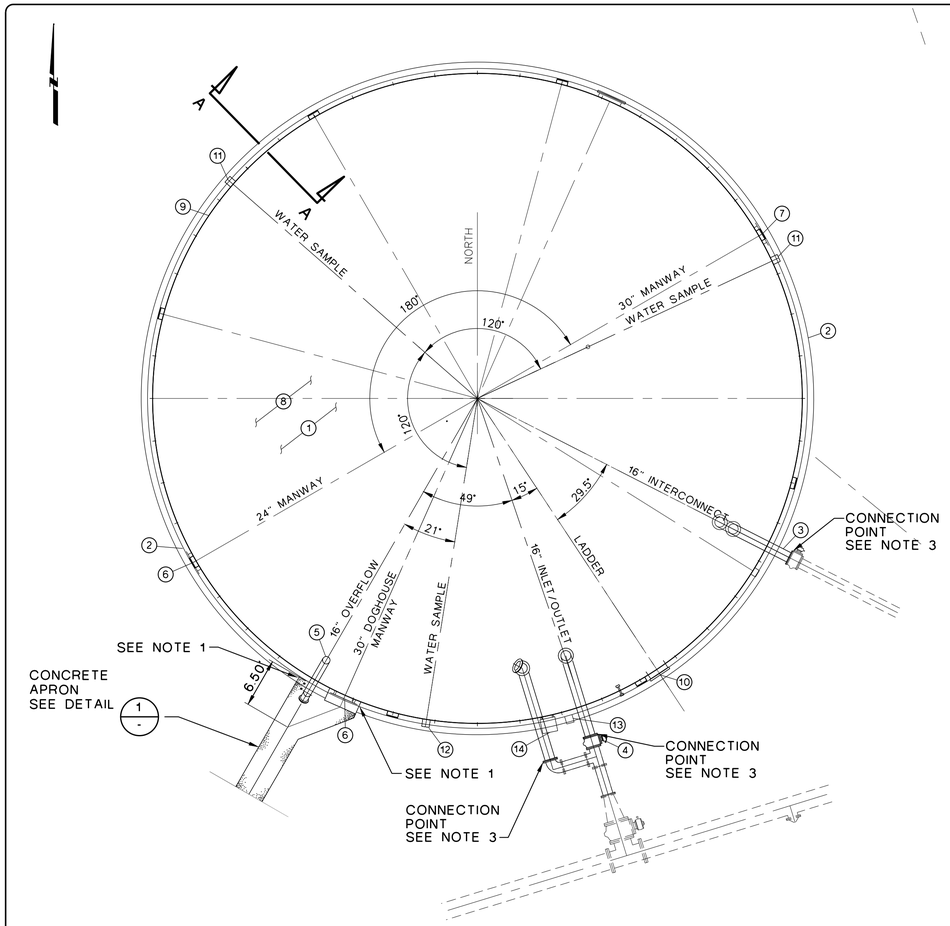

FLOOR PLAN

1"=10'

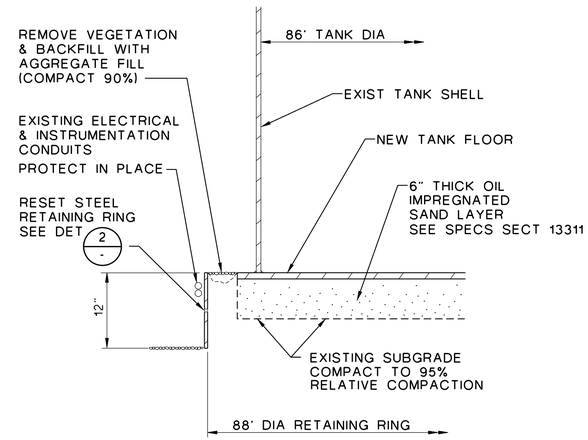

SECTION A-A

REHABILITATION SCHEDULE

1. REPLACE TANK FLOOR IN ITS ENTIRETY AND INSTALL 6" OIL IMPREGNATED SAND BASE CUSHION.
2. RESET STEEL SOIL RETAINING RING - SEE DET 2 DWG C-2
3. CONSTRUCT NEW 16" INTER-CONNECTING PIPE - SEE DETAIL 3 DWG CD-1
4. CONSTRUCT NEW 16" INLET PIPE AND APPURTENANCES - SEE DET 1 DWG CD-1
5. CONSTRUCT NEW 16" OVERFLOW PIPE - SEE DET 3 DWG CD-4
6. PROVIDE AND INSTALL NEW GASKETS ON ACCESS MANHOLES (2 TOTAL)
7. PROVIDE AND INSTALL NEW 30" DIA MANWAY SEE DET 2/CD-5.
8. COAT INSIDE OF TANK PER SPECIFICATION SECTION 09950
9. COAT OUTSIDE OF TANK PER SPECIFICATION SECTION 09950
10. PROVIDE AND INSTALL OUTSIDE LADDER AND SAFETY RAILING - SEE DET 1 DWG CD-3
11. CONSTRUCT WATER SAMPLING PORTS AND ENCLOSURE (2 TOTAL) - SEE DET 2 CD-4
12. CONSTRUCT ENCLOSURE ON THE EXISTING WATER SAMPLING PORT
13. CONSTRUCT ENCLOSURE FOR THE EXISTING PRESSURE TRANSDUCER ASSY (SIMILAR TO DETAIL 2 DWG CD-4)
14. REINSTALL RECTIFIER FOR IMPRESSED CURRENT CORROSION PROTECTION SYSTEM SEE DWG E-1.

NOTES:

1. TERMINATE STEEL RETAINING RING AT STEEL FLUSH PLATE (ONE SIDE) AND A CONCRETE APRON (CHANNEL SIDE) SECURE ENDS WITH STEEL ANCHORING BAR PER DETAIL 2.
2. SET TOP OF RING 1" BELOW TOP OF TANK BOTTOM PLATE.
3. VERIFY EXACT LOCATION OF CONNECTING POINTS. SEE NOTE 53 DWG G-1.

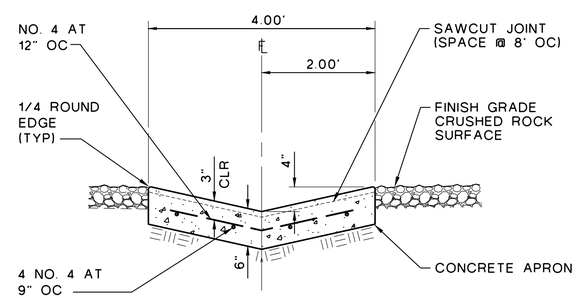

SECTION

CONCRETE APRON

DETAIL 1

NO SCALE

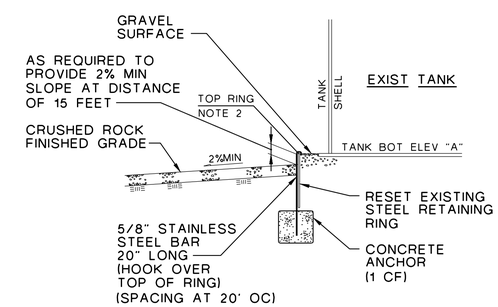

SECTION

STEEL RETAINING RING RESET

DETAIL 2

NO SCALE

0 10 20 30

SCALE: 1" = 10'

REVISIONS:

LAKE HAVASU CITY

ATKINS

Copyright © Atkins North America, Inc (2014)
2270 CORPORATE CIRCLE, SUITE 200
HENDERSON, NV 89074
TEL: +1 (702) 263-7275
FAX: +1 (702) 263-7200
www.atkinsglobal.com

ORIGINAL SCALE: 0 1" 2" 3" 4" INCHES

FLOOR PLAN ALTERNATIVE 1

PROJECT: TANK 2A-06 REHAB/REPLACEMENT
LAKE HAVASU CITY, ARIZONA

DESIGNED BY: RKO/RAW
DRAWN BY: RAW

Registered Professional Engineer (Civil) CERTIFICATE NO. 60707 ROMAN KOCZAN Date Signed 9-11-18 ARIZONA U.S.A.

EXPIRES 9-11-2018

PROJECT NO. WT6090

DWG NO. C-2

Plotted By: WADE5481 Date: 28-Jun-16-04:37
File: H:\Clients\Lake Havasu\100047996 LHC As Needed\02 TANK-2A\CADD\03-Mst\47996 2A C02.dwg

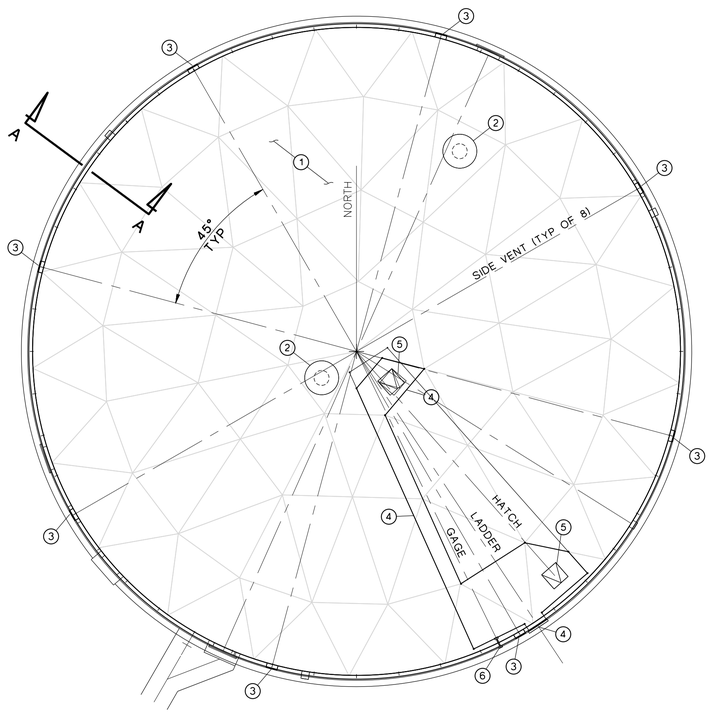

ALUMINUM ROOF PLAN (ALT 1A)

1"=10'

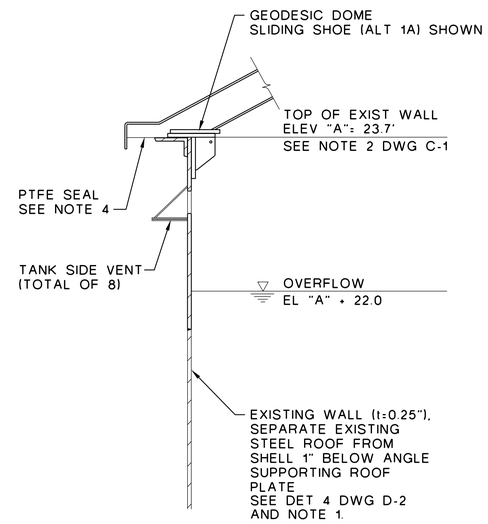

SECTION A-A

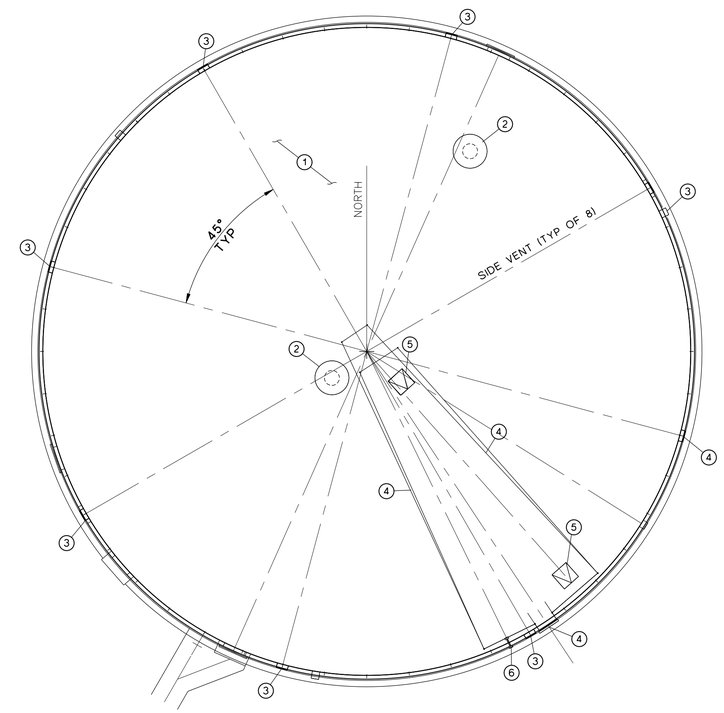

STEEL ROOF PLAN (ALT 1B)

1"=10'

REHABILITATION SCHEDULE

1. PROVIDE AND INSTALL NEW ROOF:
   ALTERNATIVE 1A - ALUMINUM DOME ROOF
   ALTERNATIVE 1B - STEEL ROOF
2. PROVIDE AND INSTALL NON-CLOGGING ROOF VENTS (TYP OF 2)
   LOCATION DETERMINED BY ROOF PANEL LAYOUT - SEE DETAIL 3 DWG CD-5 & NOTE 5.
3. CONSTRUCT TANK SIDE VENTS (8 TOTAL SPACED EQUALLY) - SEE DETAIL 1 DWG CD-5
4. PROVIDE AND INSTALL OUTSIDE LADDER AND SAFETY RAILING - SEE DET 1 & 2 DWG CD-3
5. CONSTRUCT NEW ALUMINUM 30" X 30" ACCESS HATCH (2 REQUIRED) - SEE DET 6 DWG CD-5
6. PROVIDE AND INSTALL LEVEL GAUGE - SEE DETAIL 1 DWG CD-4

SEE SPECIFICATION 55910

NOTES

1. CONTRACTOR SHALL EVALUATE STRUCTURAL STRENGTH OF EXISTING TANK SHELL TO SUPPORT PROPOSED ROOF STRUCTURE, AND PROVIDE DESIGN OF MODIFICATIONS IF REQUIRED.
2. DESIGN OF STIFFENING RING (IF USED) SHALL BE ACCORDING TO API 650.
3. DESIGN OF THE ROOF AND ALL MODIFICATIONS TO THE EXISTING TANK IS CONTRACTOR RESPONSIBILITY. DESIGN SHALL BE SIGNED BY A REGISTERED IN ARIZONA STRUCTURAL ENGINEER.
4. PTFE SEAL PROVIDED BY ROOF MANUFACTURER. (ALT 1A)
5. LOCATE ONE ROOF VENT 15' MAX FROM CENTER AND ONE ROOF VENT MAX 15' FROM WALL. ROOF VENTS SHALL BE PLACED IN OPPOSITE DIRECTION FROM CENTER.
6. LADDER, ROOF ACCESS & RAILING SYSTEM SHALL BE OSHA COMPLAINT.
7. ROOF RAMP & RAILING LAYOUT SHOWN IS APPROXIMATE AND SHALL BE DESIGNED BY ROOF MANUFACTURER.
8. TANK APPURTENANCES BASED UPON LOCATION OF EXISTING INLET/OUTLET AND INTERCONNECT PIPING. ADJUST NEW TANK APPURTENANCES PER FIELD SURVEY OF EXISTING PIPING AND APPURTENANCES.
9. SEE SPECIFICATION SECTION 13111 FOR ADDITIONAL INFORMATION AND DIRECTIONS REGARDING RE-INSTALLATION OF THE EXISTING IMPRESSED CURRENT CATHODIC PROTECTION SYSTEM.

0 10 20 30
SCALE: 1" = 10'

REVISIONS:

LAKE HAVASU CITY

ATKINS
Copyright © Atkins North America, Inc (2014)
2270 CORPORATE CIRCLE, SUITE 200
HENDERSON, NV 89074
TEL: +1 (702) 263-7275
FAX: +1 (702) 263-7200
www.atkinsglobal.com

ORIGINAL SCALE: 0 1" 2" 3" 4" INCHES

ALUMINUM AND STEEL ROOF PLANS
ALTERNATIVE 1

PROJECT:
TANK 2A-06 REHAB/REPLACEMENT
LAKE HAVASU CITY, ARIZONA

DESIGNED BY: RKO/RAW
DRAWN BY: RAW

Registered Professional Engineer (Civil)
CERTIFICATE NO. 60707
ROMAN K. OSZEWSKI
Date Signed 6-28-18
ARIZONA U.S.A.

EXPIRES 9-11-2018

PROJECT NO.
WT6090

DWG NO.
C-3
9 OF 22

Plotted By: WADE5481 Date: 28-Jun-16-05:12
File: H:\Clients\Lake Havasu\100047996 LHC As Needed\02 TANK-2A\CADD\03-Mst\47996 2A C03.dwg

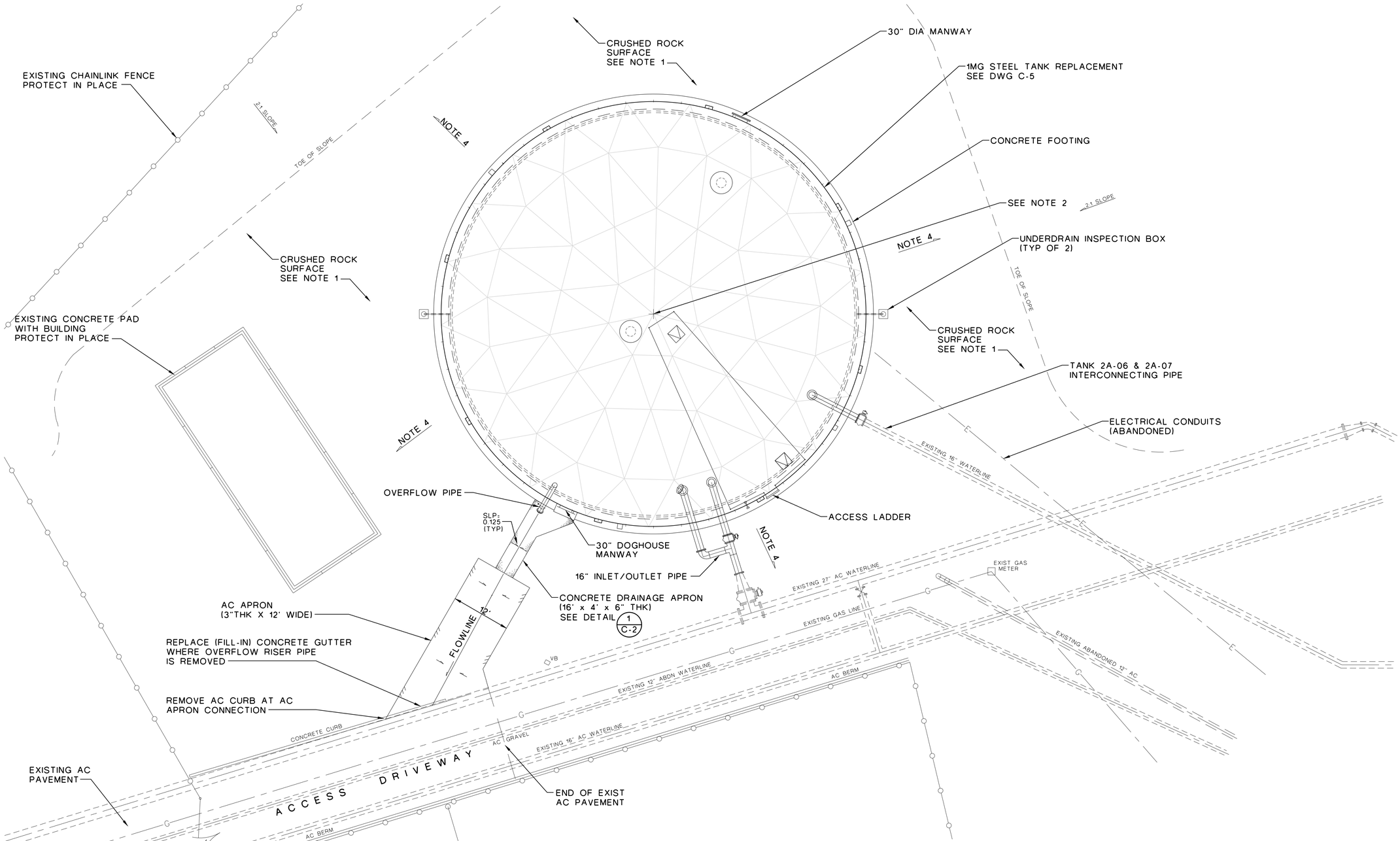

PLAN

1"=10'

NOTES:

1. REPLACE CRUSHED ROCK DISTURBED DURING CONSTRUCTION TO A DEPTH OF 3" MINIMUM. PROVIDE NEW CRUSHED ROCK IF NEEDED. CRUSHED ROCK GRADATION 3/4" MINUS.
2. THERE IS NO SURVEY CONTROL FOR THE PROJECT SITE. FOR CONSTRUCTION ALTERNATIVE 2, CONTRACTOR SHALL SURVEY AND RECORD LOCATION OF THE EXISTING TANK 2A AND TANK'S BOTTOM ELEVATION. THE NEW TANK SHALL BE LOCATED IN THE SAME PLACE, AND THE TOP OF CONCRETE FOOTING FOR NEW TANK SHALL HAVE THE SAME ELEVATION AS ELEVATION OF THE BOTTOM OF THE EXISTING TANK 2A-06. THE ELEVATION OF THE TANK 2A-06 BOTTOM SHALL BE TAKEN AT THE EXISTING TANK'S ACCESS LADDER. THIS ELEVATION IS REFERENCED AS ELEVATION "A" IN THE PLANS.
3. SEE DRAWINGS C-5 AND C-6 FOR IMPROVEMENTS SPECIFIC ALTERNATIVE 2.
4. GRADE EXISTING GROUND AWAY FROM TANK FOUNDATION.

0 10 20 30

SCALE: 1" = 10'

REVISIONS:

LAKE HAVASU CITY

ATKINS

Copyright © Atkins North America, Inc (2014)
2270 CORPORATE CIRCLE, SUITE 200
HENDERSON, NV 89074
TEL: +1 (702) 263-7275
FAX: +1 (702) 263-7200
www.atkinsglobal.com

ORIGINAL SCALE: INCHES 0 1 2 3 4

SITE PLAN
ALTERNATIVE 2

PROJECT:
TANK 2A-06 REHAB/REPLACEMENT
LAKE HAVASU CITY, ARIZONA

DESIGNED BY: RKO/RAW
DRAWN BY: RAW

Registered Professional Engineer (Civil)
CERTIFICATE NO. 60797
ROMAN, OSCEPA
Date Signed
ARIZONA U.S.A.

EXPIRES 9-11-2018

PROJECT NO.
WT6090

DWG NO.
C-4
10 OF 22

Plotted By: WADE5481 Date: 28-Jun-16-05:13
File: H:\Clients\Lake Havasu\100047996 LHC As Needed\02 TANK-2A\CADD\03-Mst\47996 2A C04.dwg

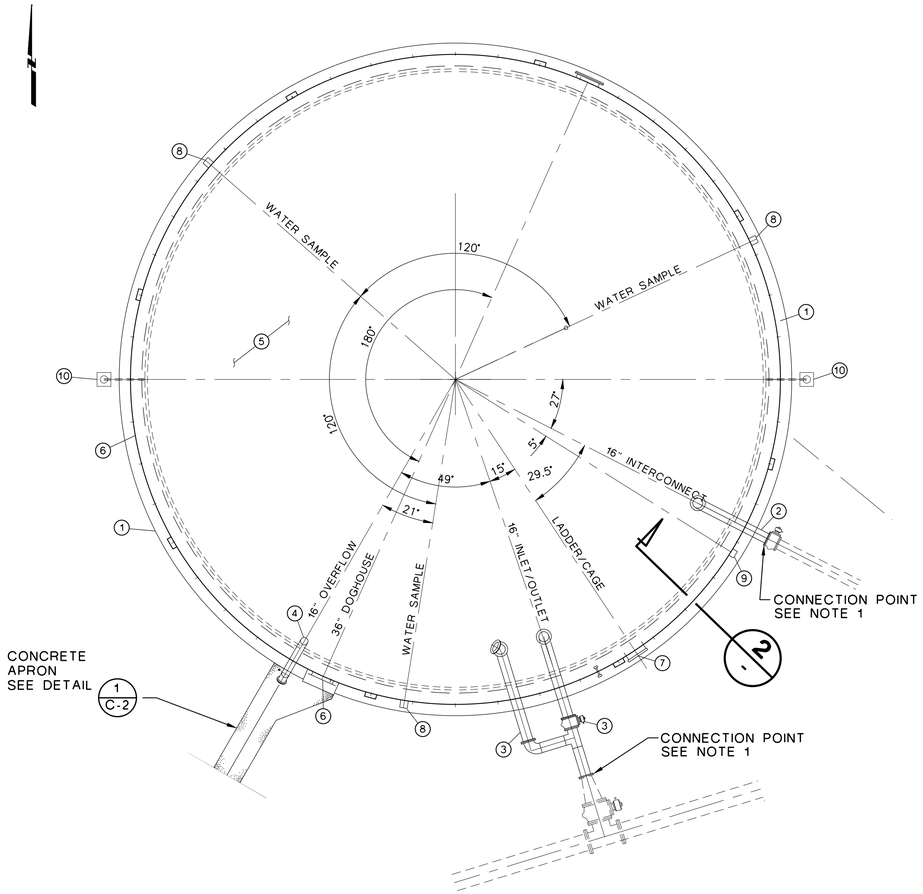

FLOOR PLAN

1"=10'

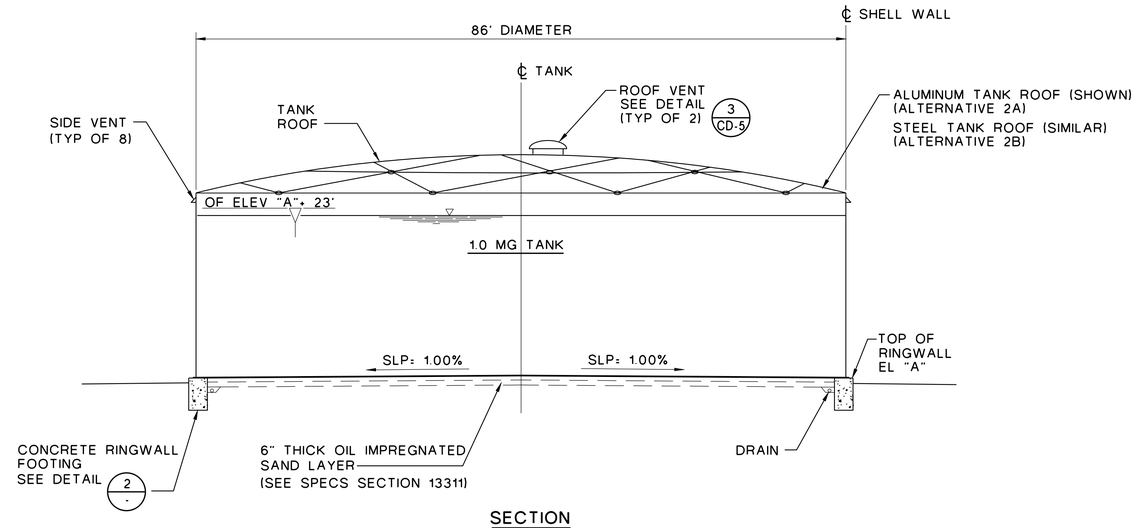

SECTION

TANK SECTION

(ALTERNATIVE 2)

DETAIL A

1"=10'

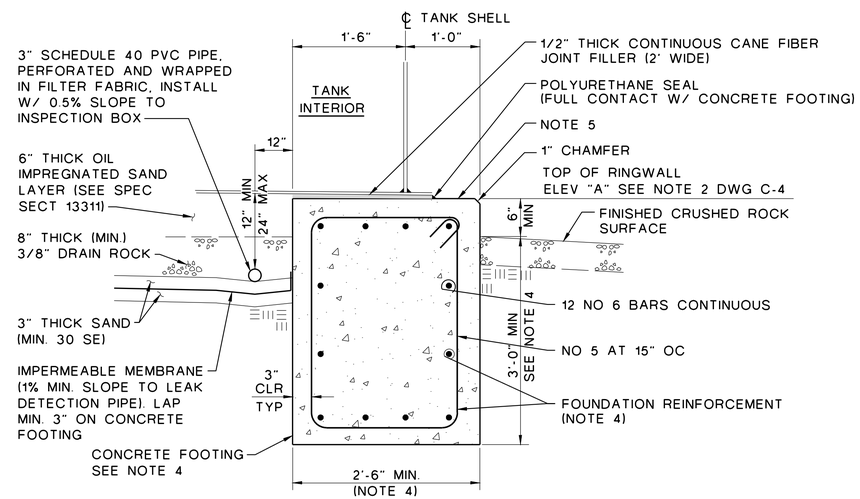

NOTES: (DETAIL 2)

1. FOUNDATION PREPARATION PER SPECIFICATION SECTION 13311
2. TANK CONSTRUCTION SHALL CONFORM TO AWWA D100-11 (WELDED STEEL). ALL DISINFECTION PROCEDURES SHALL MEET REQUIREMENTS OF SPECIFICATION SECTION 13211. ALL TANK/APPURTENANCE COATINGS SHALL MEET THE REQUIREMENTS OF AWWA D102, AND SPECIFICATION SECTION 09950.
3. FOR CATHODIC PROTECTION SYSTEM, SEE DRAWING CP-1 AND SPECIFICATIONS.
4. ACTUAL SIZE OF FOOTING AND REINFORCEMENT PER TANK MANUFACTURER. VALUES SHOWN ON DETAIL ARE MINIMUM.
5. STEEL TROWEL FINISH TOP TO BE LEVEL WITHIN 1/8" IN ANY 30' AND 1/4" OVERALL.
6. PROVIDE CONTROL JOINTS IN RINGWALL @ 20'O.C. MAX.

SECTION

(ALTERNATIVE 2)

FOOTING DETAIL

DETAIL 2

1"=1'-0"

REPLACEMENT SCHEDULE

1. CONCRETE FOOTING - SEE DET 2 DWG C-5
2. 16" INTER-CONNECTING PIPE - SEE DETAIL 4 DWG CD-1
3. 16" INLET/OUTLET PIPE AND APPURTENANCES - SEE DET 2 DWG CD-1
4. 16" OVERFLOW PIPE - SEE DET 3 DWG CD-4
5. COAT INSIDE OF TANK PER SPECIFICATION SECTION 09950
6. COAT OUTSIDE OF TANK PER SPECIFICATION SECTION 09950
7. OUTSIDE LADDER AND SAFETY RAILING - SEE DET 1 DWG CD-3
8. WATER SAMPLING PORTS AND ENCLOSURE (3 TOTAL) - SEE DET 2 DWG CD-4
9. PRESSURE TRANSDUCER ASSY - SEE DET 2 DWG CD-4
10. UNDERDRAIN INSPECTION BOX - SEE DET 4 DWG CD-2

NOTE:

1. VERIFY EXACT LOCATION OF CONNECTION POINTS TO EXISTING SYSTEM. SEE NOTE 53 DRAWING G-1.

0 10 20 30

SCALE: 1" = 10'

REVISIONS:

LAKE HAVASU CITY

ATKINS

Copyright © Atkins North America, Inc (2014)
2270 CORPORATE CIRCLE, SUITE 200
HENDERSON, NV 89074
TEL: +1 (702) 263-7275
FAX: +1 (702) 263-7200
www.atkinsglobal.com

ORIGINAL SCALE: 1" INCHES 1 2 3 4

FLOOR PLAN
ALTERNATIVE 2

PROJECT:
TANK 2A-06 REHAB/REPLACEMENT
LAKE HAVASU CITY, ARIZONA

DESIGNED BY: RKO/RAW
DRAWN BY: RAW

Registered Professional Engineer (Civil)
CERTIFICATE NO. 60707
ROMAN KOSCHEK
Date Signed 9-28-16
ARIZONA U.S.A.

EXPIRES 9-11-2018

PROJECT NO.
WT6090

DWG NO.
C-5
11 OF 22

Plotted By: WADE5481 Date: 28-Jun-16-11:32
File: H:\Clients\Lake Havasu\100047996 LHC As Needed\02 TANK-2A\CADD\03-Mst\47996 2A C05.dwg

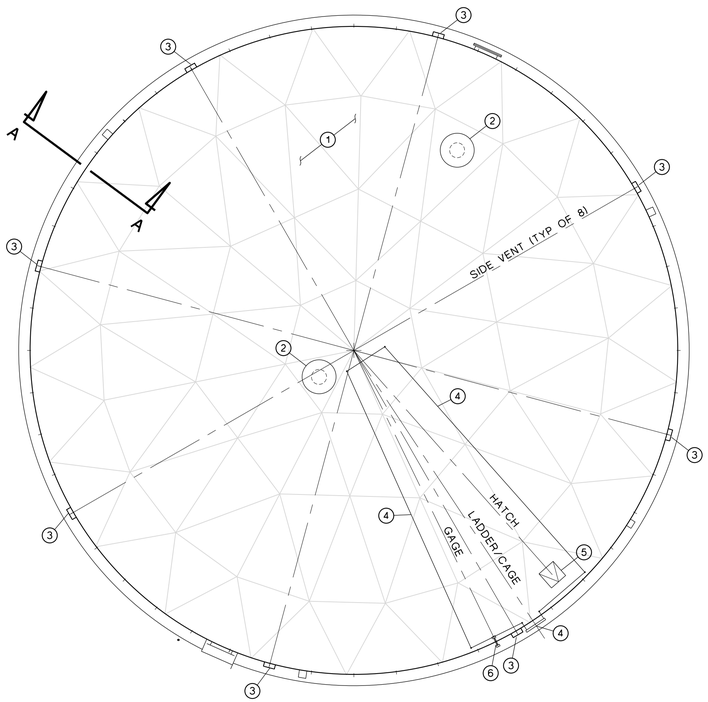

ALUMINUM ROOF PLAN (ALT 2A)

1"=10'

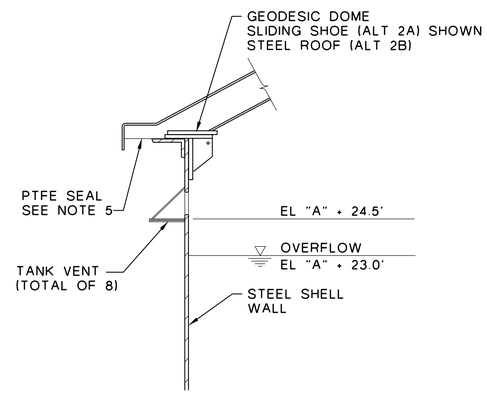

SECTION A-A

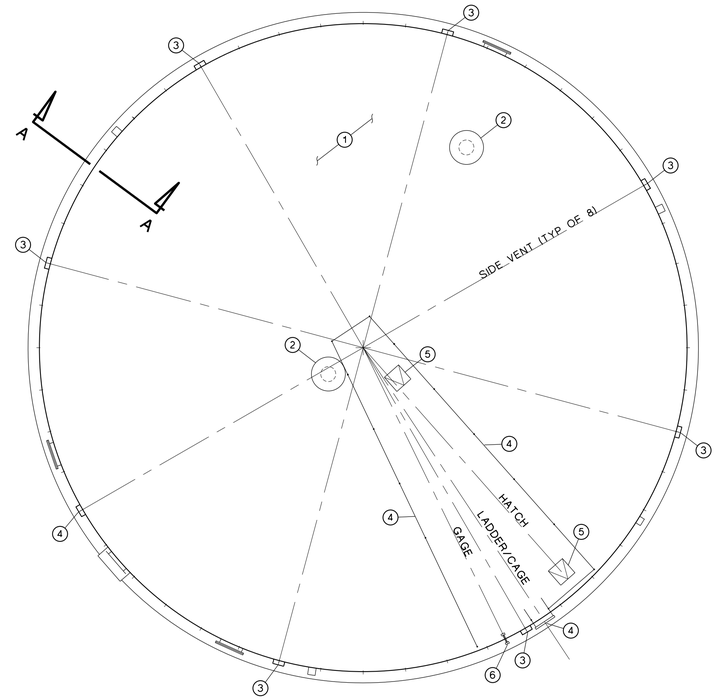

STEEL ROOF PLAN (ALT 2B)

1"=10'

EQUIPMENT SCHEDULE

1. PROVIDE AND INSTALL NEW ROOF:
   ALTERNATIVE 2A - ALUMINUM DOME ROOF
   ALTERNATIVE 2B - STEEL ROOF
2. NON-CLOGGING ROOF VENTS (TYP OF 2)
   LOCATION DETERMINED BY ROOF PANEL LAYOUT - SEE DETAIL 3 DWG CD-5
   SEE NOTE 4 SEE SPECIFICATION 15910
3. TANK SIDE VENTS (8 TOTAL SPACED EQUALLY) - SEE DET 4 DWG CD-5
4. OUTSIDE LADDER AND SAFETY RAILING - SEE DET 1, 2, 3 & 4 DWG CD-3
5. ALUMINUM 30" X 30" ACCESS HATCH (2 REQUIRED) - SEE DET 6 DWG CD-5
6. LEVEL GAUGE - SEE DETAIL 1 DWG CD-4

NOTES

1. LADDER & ROOF ACCESS RAILING SYSTEM SHALL BE OSHA COMPLIANT.
2. ROOF RAMP RAILING LAYOUT SHOWN IS APPROXIMATE AND SHALL BE DESIGNED BY ROOF MANUFACTURER.
3. TANK APPURTENANCES ARE BASED ON UPON LOCATION OF EXISTING INLET/OUTLET AND INTERCONNECTING PIPING. ADJUST NEW TANK APPURTENANCES PER FIELD SURVEY OF EXISTING TANK AND APPURTENANCES.
4. LOCATE ONE ROOF VENT 15' MAX FROM CENTER AND ONE ROOF VENT MAX 15' FROM WALL. ROOF VENTS SHALL BE PLACED IN OPPOSITE DIRECTION FROM CENTER.
5. SEE CP DRAWINGS FOR LOCATION AND SIZE OF ROOF OPENINGS FOR CP ANODES.

0 10 20 30
SCALE: 1" = 10'

REVISIONS:

LAKE HAVASU CITY

ATKINS

Copyright © Atkins North America, Inc (2014)
2270 CORPORATE CIRCLE, SUITE 200
HENDERSON, NV 89074
TEL: +1 (702) 263-7275
FAX: +1 (702) 263-7200
www.atkinsglobal.com

ORIGINAL SCALE: 0 1" 2" 3" 4" INCHES

ALUMINUM AND STEEL ROOF PLANS
ALTERNATIVE 2

PROJECT:
TANK 2A-06 REHAB/REPLACEMENT
LAKE HAVASU CITY, ARIZONA

DESIGNED BY: RKO/RAW
DRAWN BY: RAW

Registered Professional Engineer (Civil)
Certificate No. 60707
ROMAN K. OBZEJTA
Date Signed 9-11-2018
ARIZONA U.S.A.
EXPIRES 9-11-2018

PROJECT NO.
WT6090

DWG NO.
C-6
12 OF 22

Plotted By: WADE5481 Date: 28-Jun-16-05:15
File: H:\Clients\Lake Havasu\100047996 LHC As Needed\02 TANK-2A\CADD\03-Mst\47996 2A C06.dwg

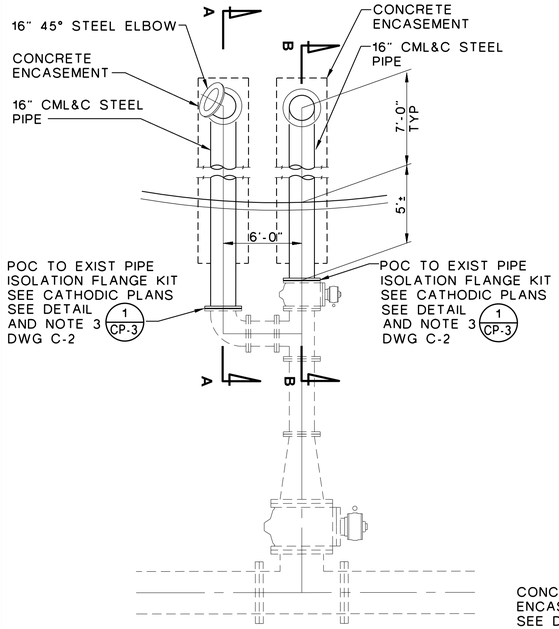

PLAN

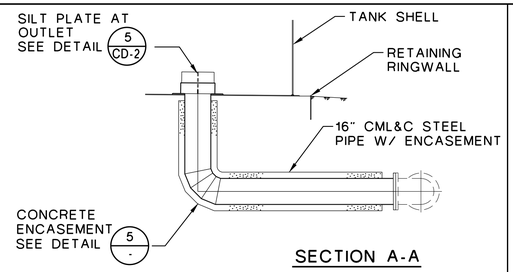

SECTION A-A

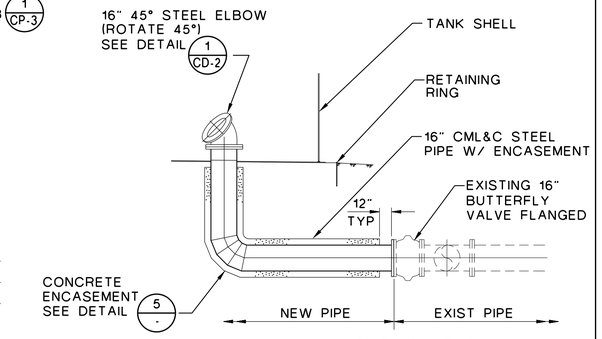

SECTION B-B

16" INLET/OUTLET CONNECTION
(ALTERNATIVE 1)

DETAIL 1 -
1/4"=1'-0"

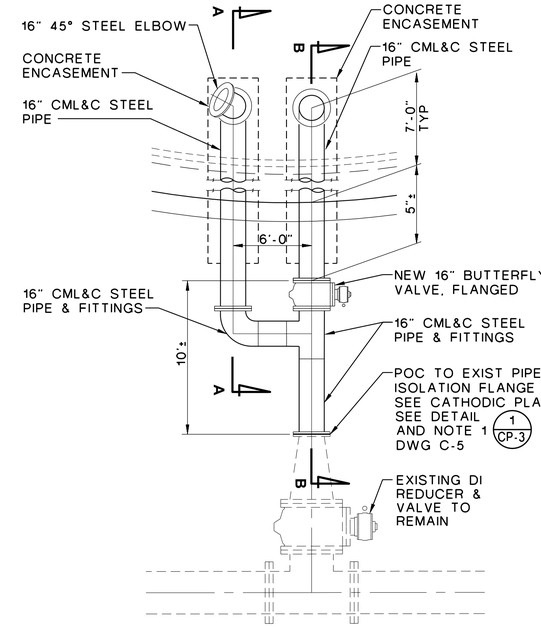

PLAN

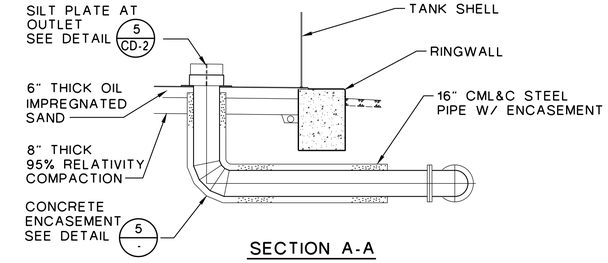

SECTION A-A

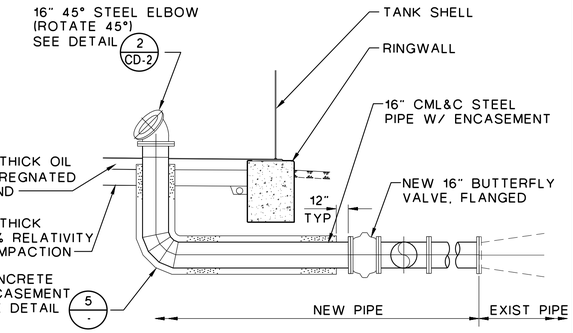

SECTION B-B

16" INLET/OUTLET CONNECTION
(ALTERNATIVE 2)

DETAIL 2 -
1/4"=1'-0"

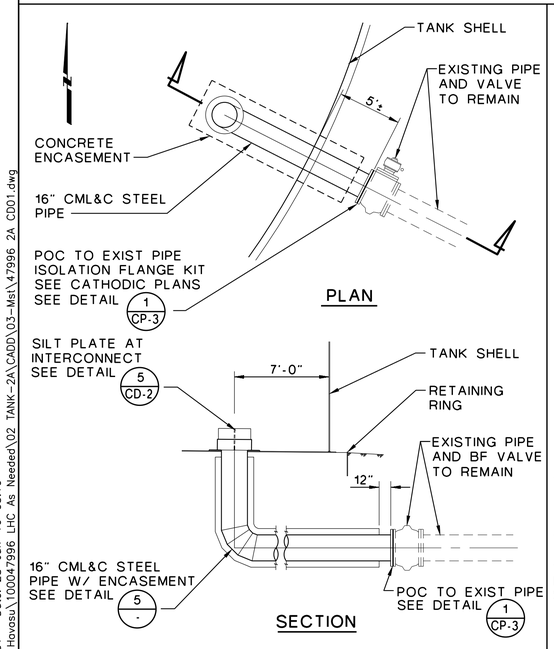

PLAN

SECTION

16" INTERCONNECT CONNECTION
(ALTERNATIVE 1)

DETAIL 3 -
NO SCALE

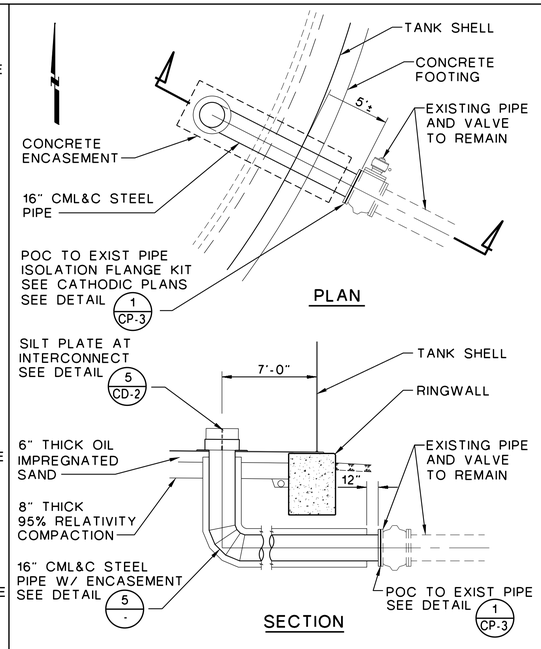

PLAN

SECTION

16" INTERCONNECT CONNECTION
(ALTERNATIVE 2)

DETAIL 4 -
NO SCALE

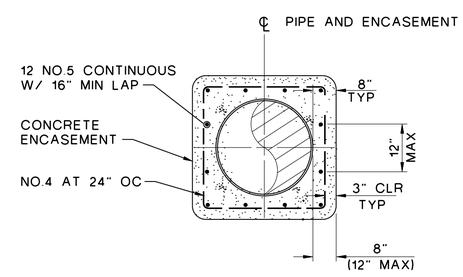

SECTION

CONCRETE PIPE ENCASEMENT
(ALTERNATIVES 1 & 2)

DETAIL 5 -
NO SCALE

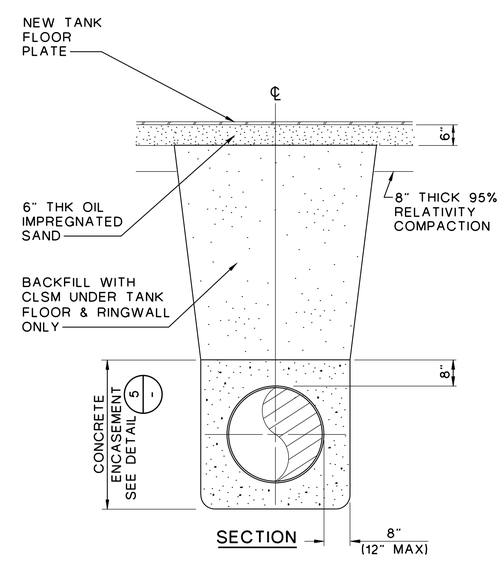

SECTION

PIPE BACKFILL UNDER TANK FLOOR
(ALTERNATIVES 1 & 2)

DETAIL 6 -
NO SCALE

REVISIONS:

LAKE HAVASU CITY

ATKINS

Copyright © Atkins North America, Inc (2014)
4220 CORPORATE CIRCLE, SUITE 200
ROSEVILLE, CA 95678
TEL: +1 (702) 263-7275
FAX: +1 (702) 263-7200
www.atkinsglobal.com

ORIGINAL SCALE: 1" INCHES

INLET/OUTLET & INTERCONNECT CONNECTIONS, CONCRETE ENCASEMENT & BACKFILL DETAILS ALTERNATIVES 1 & 2

PROJECT: TANK 2A-06 REHAB/REPLACEMENT
LAKE HAVASU CITY, ARIZONA

DESIGNED BY: RKO/RAW
DRAWN BY: RAW

Registered Professional Engineer (Civil) CERTIFICATE NO. 68700 ROMAN KOELLER Date Signed 4-26-18 ARIZONA U.S.A.
EXPIRES 9-11-2018

PROJECT NO. WT6090

DWG NO. CD-1
13 OF 22

Plotted By: WADE5481 Date: 28-Jun-16-05:16
File: H:\Clients\Lake Havasu\100047996 LHC As Needed\02 TANK-2A\CADD\03-Mst\47996 2A CD01.dwg

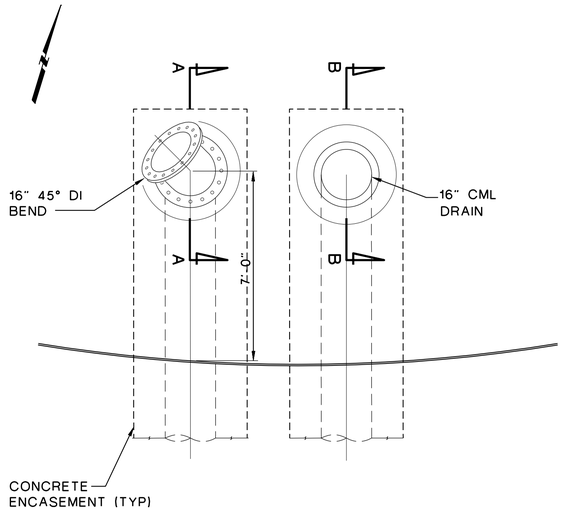

PLAN

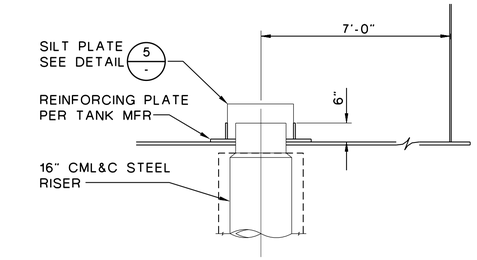

SECTION B-B

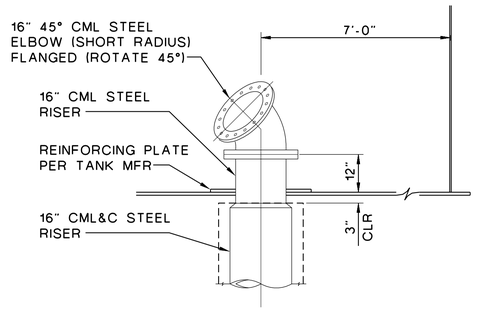

SECTION A-A

NOTE:
1. SEE SPECIFICATION 02652 FOR LINING AND COATING REQUIREMENTS.

INTERIOR INLET/OUTLET PIPING
(ALTERNATIVE 1)

DETAIL 1/-
1/2"=1'-0"

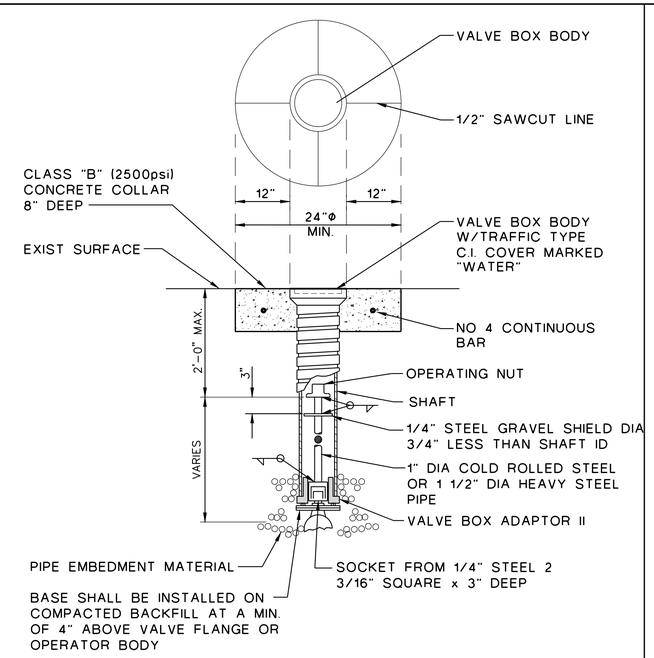

WATER VALVE BOX AND APRON
(ALTERNATIVES 1 & 2)

DETAIL 3/-
NO SCALE

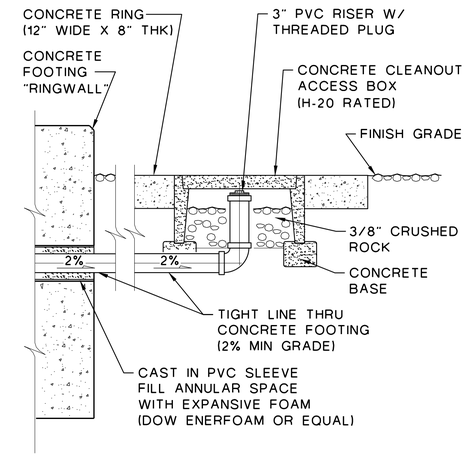

UNDERDRAIN INSPECTION BOX
(ALTERNATIVE 2)

DETAIL 4/-
NO SCALE

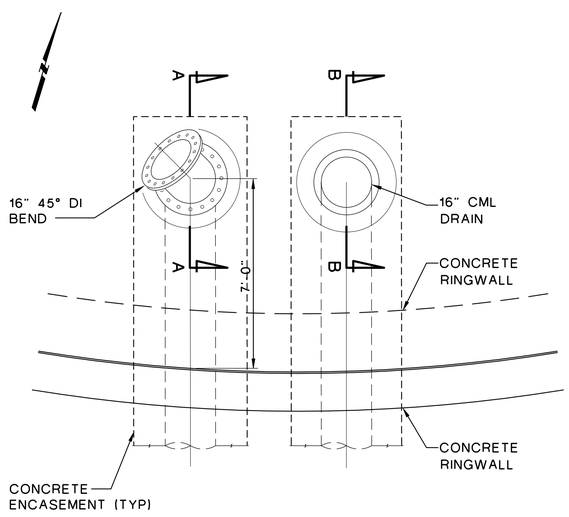

PLAN

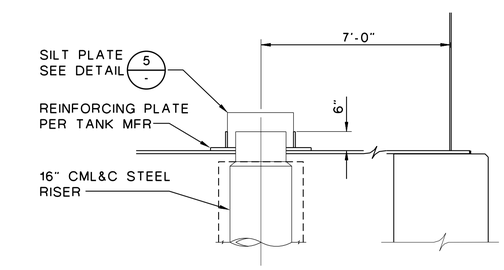

SECTION B-B

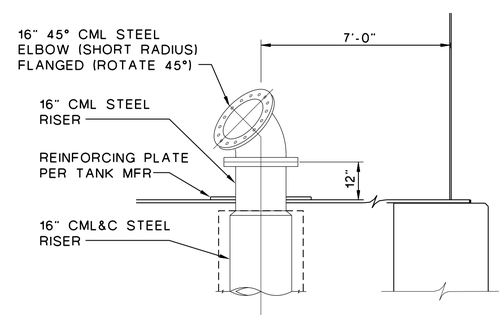

SECTION A-A

NOTE:
1. SEE SPECIFICATION 02652 FOR LINING AND COATING REQUIREMENTS.

INTERIOR INLET/OUTLET PIPING
(ALTERNATIVE 2)

DETAIL 2/-
1/2"=1'-0"

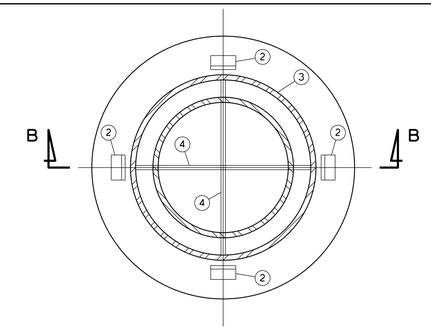

SECTION

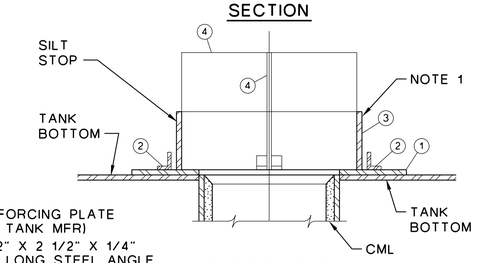

SECTION B-B

1. REINFORCING PLATE (PER TANK MFR)
2. 2 1/2" X 2 1/2" X 1/4" X 3" LONG STEEL ANGLE
3. 3/8" x 6" X 24" SILT STOP
4. (2) 3/8' X 12" X 24" STIFF PLATE

NOTE:
1. COAT WITH THE SAME COATING SYSTEM USED FOR TANK'S INSIDE SURFACES.

SILT PLATE
(ALTERNATIVES 1 & 2)

DETAIL 5/-
NO SCALE

REVISIONS:

ORIGINAL SCALE: 1" INCHES

LAKE HAVASU CITY

ATKINS

Copyright © Atkins North America, Inc (2014)
2200 CORPORATE CIRCLE, SUITE 200
HENDERSON, NV 89074
TEL: +1 (702) 263-7275
FAX: +1 (702) 263-7200
www.atkinsglobal.com

INTERIOR INLET /OUTLET, VALVE BOX, UNDERDRAIN AND SILT PLATE DETAILS ALTERNATIVES 1 & 2

PROJECT: TANK 2A-06 REHAB/REPLACEMENT
LAKE HAVASU CITY, ARIZONA

DESIGNED BY: RKO/RAW
DRAWN BY: RAW

Registered Professional Engineer (Civil) CERTIFICATE NO. 60707 ROMAN K. OBZEJTA Date Signed 6-28-16 ARIZONA U.S.A. EXPIRES 9-11-2018

PROJECT NO. WT6090

DWG NO. CD-2

Plotted By: WADE5481 Date: 28-Jun-16-05:18
File: H:\Clients\Lake Havasu\100047996 LHC As Needed\02 TANK-2A\CADD\03-Mst\47996 2A CD02.dwg

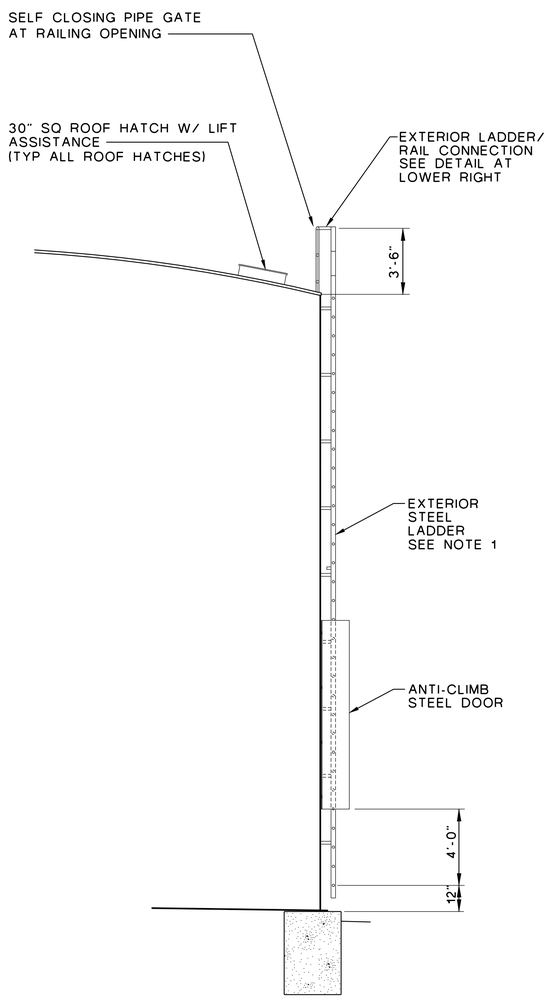

SECTION
1/4": 1'-0"

NOTES:

1. LADDER BRACING PER MANUFACTURER.
2. INTERIOR AND EXTERIOR STEEL TANK APPURTANANCES EXCLUSIVE OF STAINLESS STEEL (FALL PREVENTION SYSTEM, BRACES, ETC) SHALL BE COATED PER SPECIFICATION 09950. EXTERIOR COLOR: DESERT TAN TO MATCH EXISTING TANK
3. SAF-T-CLIMB FALL PREVENTION SYSTEM SHALL BE TYPE 316L SST AND INCLUDE TWO (2) SAF-T-CLIMB HARNESSES AND WEATHER PROOF SAF-T-CLIMB BOX FOR STORAGE.
4. ALL STAINLESS STEEL SHALL BE ELECTRICALLY ISOLATED FROM TANK STEEL.

EXTERIOR LADDER
(ALTERNATIVES 1 AND 2)

DETAIL 1 -
NO SCALE

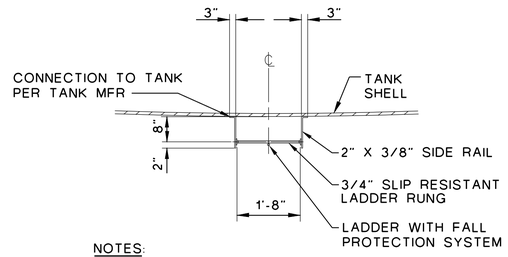

NOTES:

1. COATING SHALL BE APPLIED TO LADDER AS SPECIFIED IN SECTION 09950.

LADDER SECTION
1/2": 1'-0"

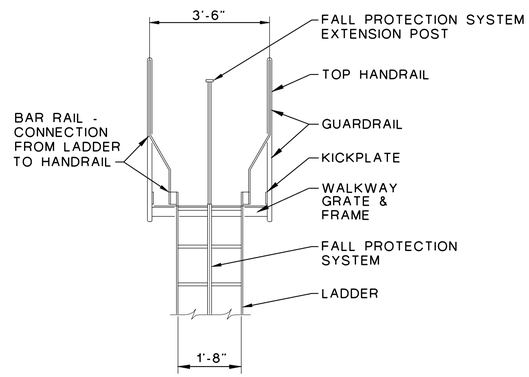

ELEVATION
1/2": 1'-0"

EXTERIOR LADDER/RAIL CONNECTION

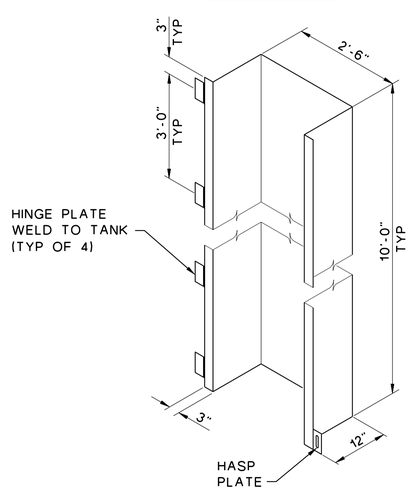

ISOMETRIC
1/2": 1'-0"

ANTI-CLIMB STEEL DOOR

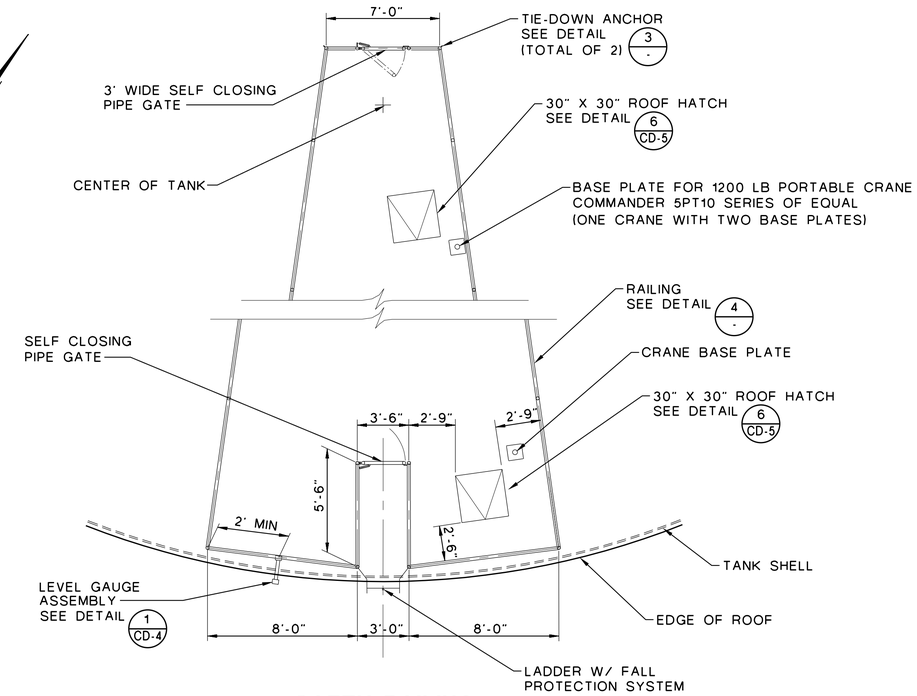

SAFTY RAILING
(ALTERNATIVE 2B)

DETAIL 2 -
1/4":1'-0"

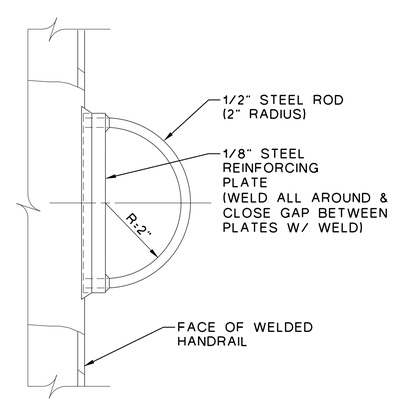

SECTION

TIE-DOWN ANCHOR

DETAIL 3 -
NO SCALE

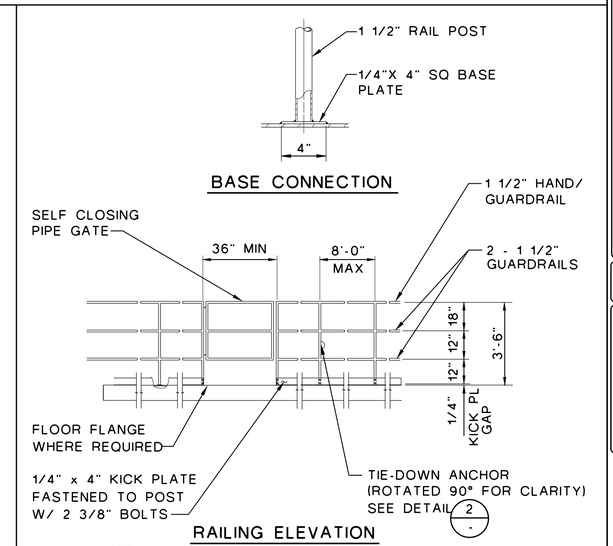

RAILING ELEVATION

NOTE:

1. RAILINGS SHALL BE SCHED 40 WELDED STEEL AND PAINTED TO MATCH TANK PER SPECIFICATIONS.
2. ALL FASTENERS SHALL BE 316 SST.

ROOF RAILING

DETAIL 4 -
NO SCALE

REVISIONS:

LAKE HAVASU CITY

ATKINS

Copyright © Atkins North America, Inc (2014)
2270 CORPORATE CIRCLE, SUITE 200
HENDERSON, NV 89074
TEL: +1 (702) 263-7275
FAX: +1 (702) 263-7200
www.atkinsglobal.com

ORIGINAL SCALE: INCHES 0 1 2 3 4

EXTERIOR LADDER, SAFETY RAILING AND MISCELLANEOUS DETAILS ALTERNATIVES 1 & 2

PROJECT: TANK 2A-06 REHAB/REPLACEMENT
LAKE HAVASU CITY, ARIZONA

DESIGNED BY: RKO/RAW
DRAWN BY: RAW

Registered Professional Engineer (Civil) CERTIFICATE NO. 69797 ROMAN ALEXANDER OSZEWSKI Date Signed 6-28-16 ARIZONA U.S.A.
EXPIRES 9-11-2018

PROJECT NO. WT6090

DWG NO. CD-3
15 OF 22

Plotted By: WADE5481 Date: 28-Jun-16-05:18
File: H:\Clients\Lake Havasu\100047996 LHC As Needed\02 TANK-2A\CADD\03-Mst\47996 2A CD03.dwg

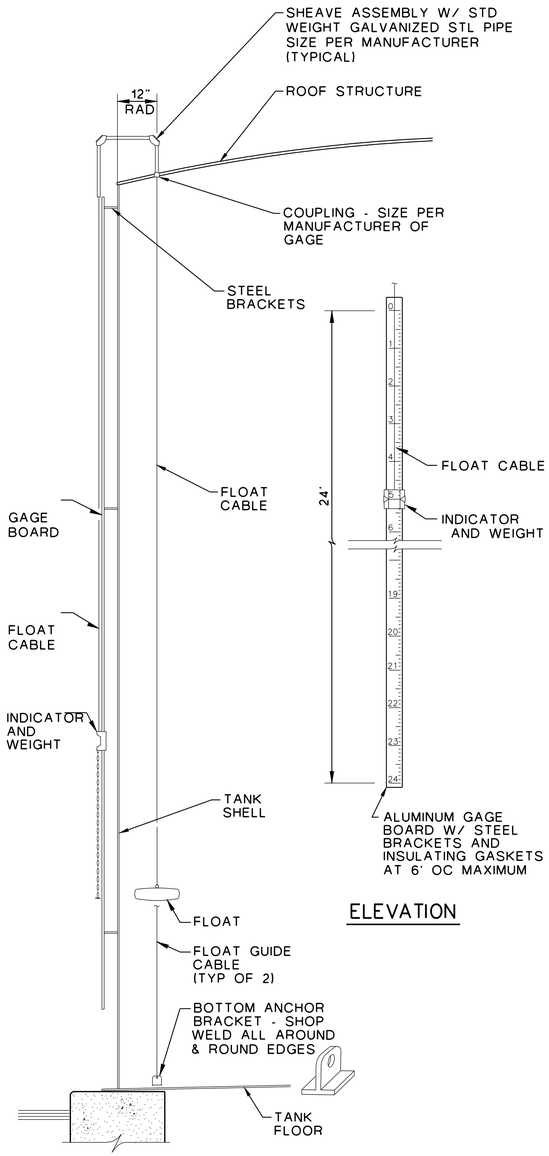

ELEVATION

SECTION

LEVEL GAUGE
(ALTERNATIVES 1 AND 2)

DETAIL 1
NO SCALE

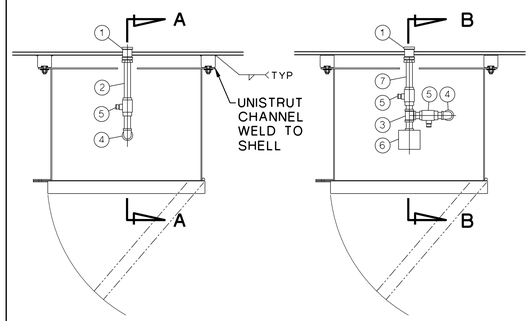

SAMPLE PORT PLAN

PRESS TRANSMITTER PLAN

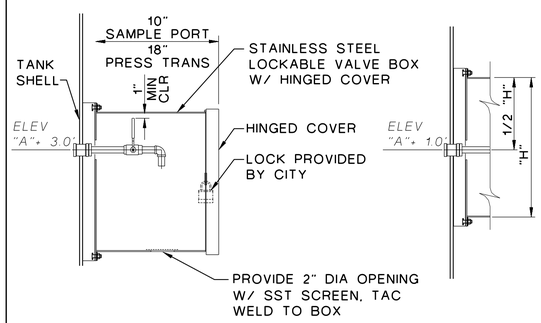

SECTION A-A
(SAMPLE PORT SHOWN PRESS TRANS SIMILAR)

SECTION B-B
PRESS TRANS

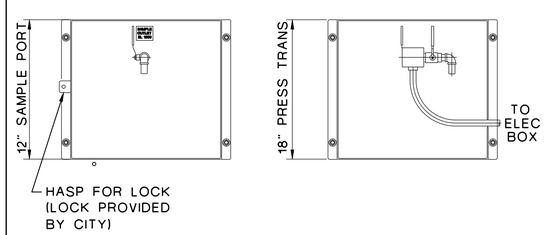

ELEVATION

EQUIPMENT SCHEDULE

1. 1" EXTRA STRONG STEEL COUPLING AND REDUCER BUSHING
2. 1/2" SST PIPE
3. 1/2" SST TEE
4. 1/2" 90° FITTING
5. 1/2" SST BALL VALVE
6. PRESSURE TRANSMITTER (SALVAGED)
7. 1/2" DIELECTRIC CONNECTOR (ClearFlow)

NOTES:

1. PROVIDE SAMPLE STATIONS AS SHOWN ON PLANS AROUND TANK PERIMETER. SEE PLANS C-2 AND C-5.

SAMPLE PORT AND PRESSURE TRANSDUCER
(ALTERNATIVES 1 AND 2)

DETAIL 2
NO SCALE

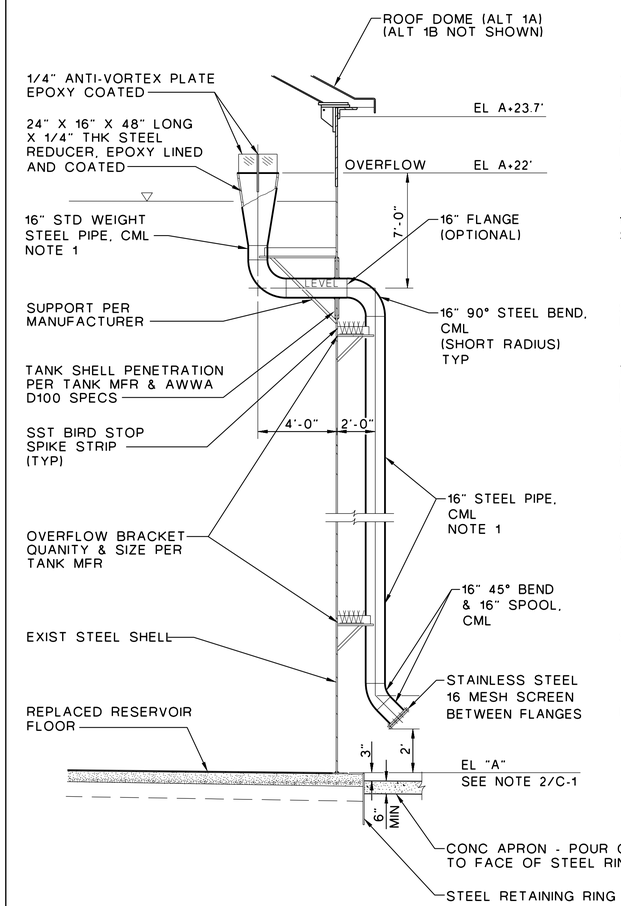

SECTION
(ALTERNATIVE 1)

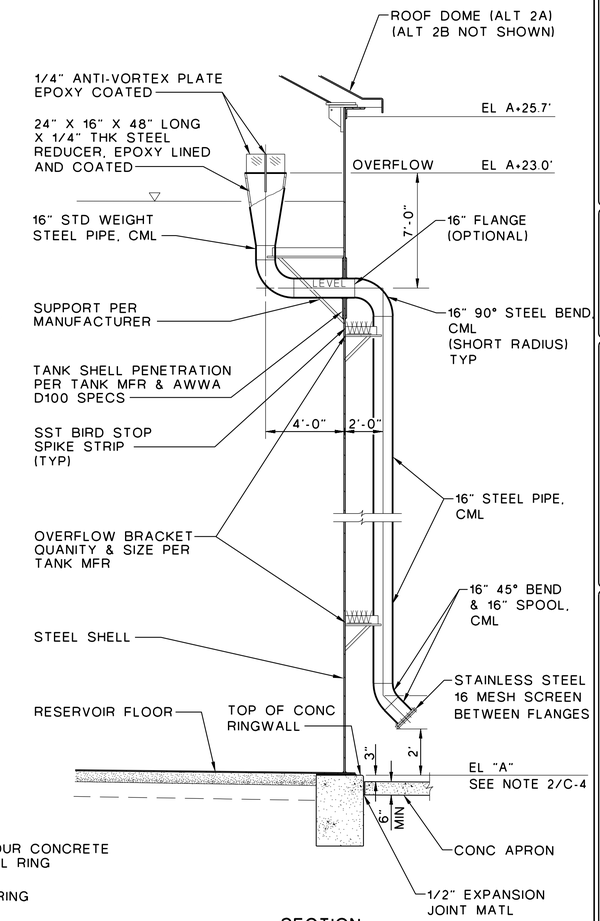

SECTION
(ALTERNATIVE 2)

NOTES:

1. COAT ALL SUBMERGED AND EXPOSED SURFACES OF OVERFLOW PIPE WITH THE SAME COATING SYSTEM SPECIFIED FOR THE INTERIOR AND EXTERIOR OF THE WELDED STEEL TANK. SEE SPECIFICATION SECTION 09950. DO NOT APPLY TO STAINLESS STEEL OR ELASTOMER SURFACES.
2. 5" LONG STAINLESS STEEL SPIKES AS BIRD DETERRENT. SPIKE STRIPS REQUIRED ON ALL HORIZONTAL BRACKETS LOCATED 8' OR ABOVE FG.
3. STEEL PIPE AND FITTINGS SHALL BE STANDARD WEIGHT.

16" OVERFLOW
(ALTERNATIVES 1 & 2)

DETAIL 3
NO SCALE

REVISIONS:

LAKE HAVASU CITY

ATKINS

Copyright © Atkins North America, Inc (2014)
4200 CORPORATE CIRCLE, SUITE 200
ROCKLEDGE, FLORIDA 32955
TEL: +1 (702) 263-7275
FAX: +1 (702) 263-7200
www.atkinsglobal.com

ORIGINAL SCALE: 1 INCHES

LEVEL GAUGE, SAMPLE PORT AND OVERFLOW ALTERNATIVES 1 & 2

PROJECT: TANK 2A-06 REHAB/REPLACEMENT
LAKE HAVASU CITY, ARIZONA

DESIGNED BY: RKO/RAW
DRAWN BY: RAW

Registered Professional Engineer (Civil) CERTIFICATE NO. 60797 ROMAN, RICHARD K. Date Signed 06-28-16 ARIZONA U.S.A.
EXPIRES 9-11-2018

PROJECT NO. WT6090

DWG NO. CD-4
16 OF 22

Plotted By: WADE5481 Date: 28-Jun-16-05:19
File: H:\Clients\Lake Havasu\100047996 LHC As Needed\02 TANK-2A\CADD\03-Mst\47996 2A CD04.dwg

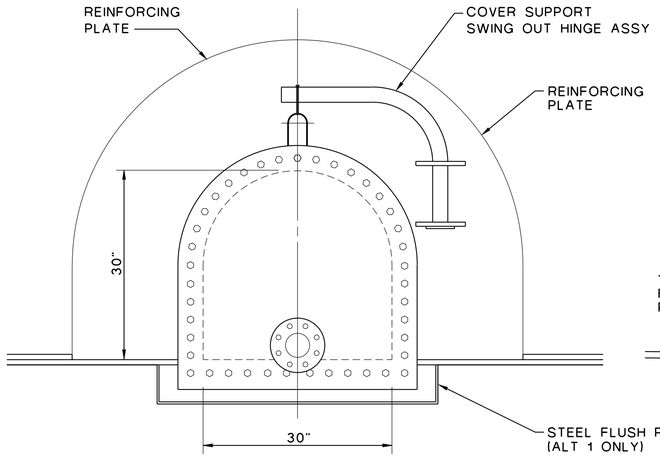

ELEVATION

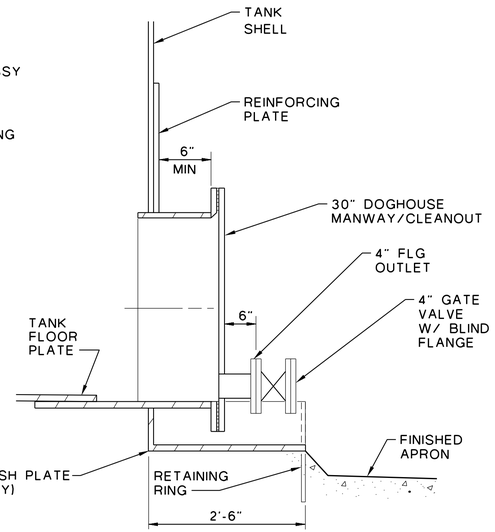

CLEANOUT SECTION
ALTERNATIVE 1

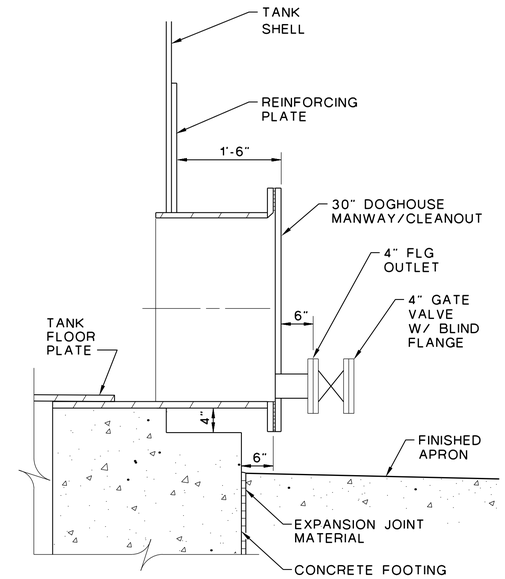

CLEANOUT SECTION
ALTERNATIVE 2

30" DOGHOUSE MANWAY/CLEANOUT W/ DRAIN

ALTERNATIVES 1 & 2

DETAIL 1
NO SCALE

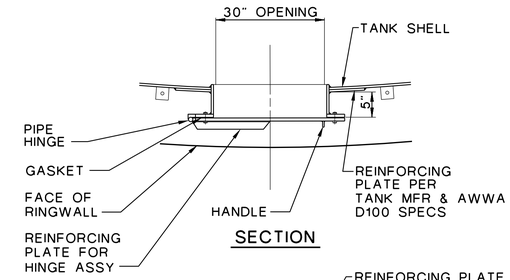

SECTION

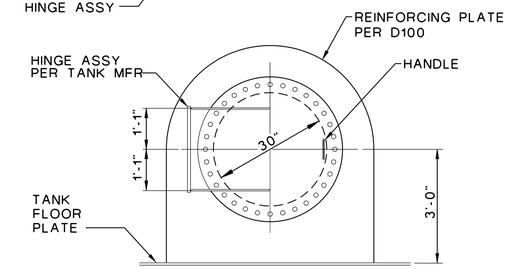

ELEVATION

NOTES:

1. CONSTRUCTION SHALL CONFORM TO AWWA D100 (WELDED STEEL TANKS).

30" MANWAY

ALTERNATIVES 1 AND 2

DETAIL 2
NO SCALE

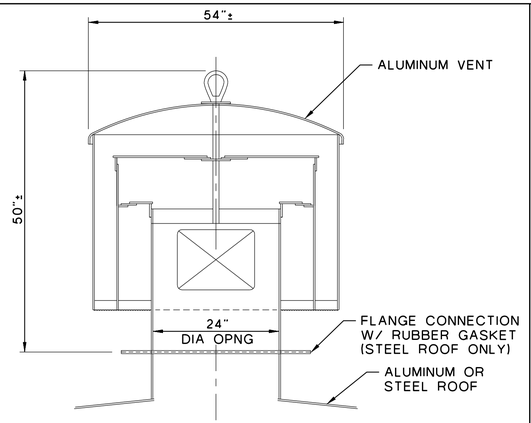

NOTES:

1. LOCATE 2 VENTS ON ROOF. APPROXIMATE LOCATION SHOWN ON PLANS. EXACT LOCATION PER ROOF MANUFACTURER.
2. ALL BOLTS AND NUTS SHALL BE 304 STAINLESS STEEL.
3. PROVIDE ISOLATION GASKET FOR STEEL ROOF ALTERNATIVE.
4. SEE SPECIFICATION SECTION 15910.

CLOG RESISTANT ROOF VENT

ALTERNATIVES 1 AND 2

DETAIL 3
NO SCALE

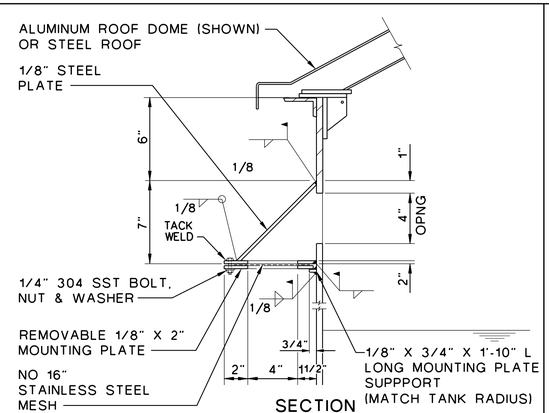

SECTION

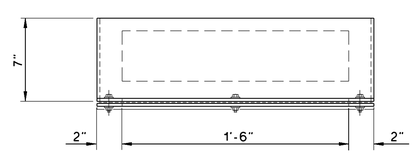

ELEVATION

SIDE VENT (TYP OF 8)

ALTERNATIVES 1 AND 2

DETAIL 4
NO SCALE

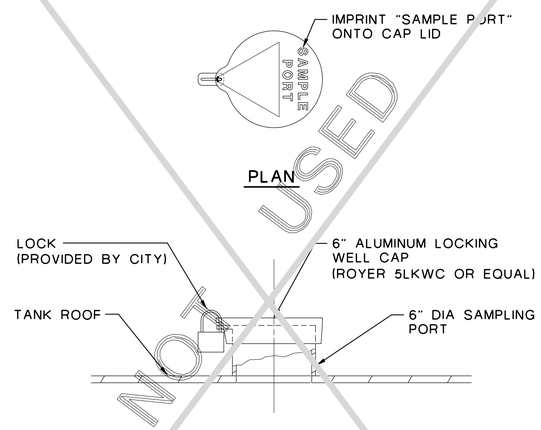

6" ROOF SAMPLING PORT

ALTERNATIVES 1 AND 2)

DETAIL 5
NO SCALE

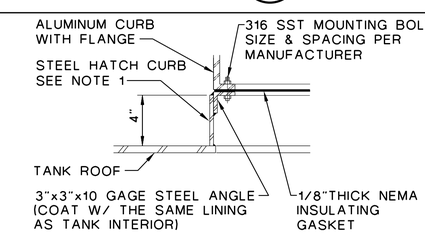

DETAIL

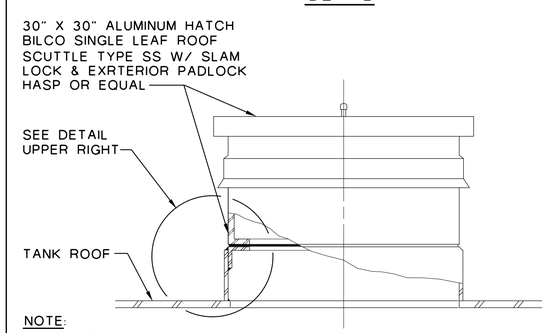

NOTE:

1. COAT INTERIOR/EXTERIOR STEEL SURFACES WITH SAME LINING AS TANK INTERIOR/EXTERIOR

SECTION

30" X 30" ACCESS HATCH

ALTERNATIVES 1 AND 2

DETAIL 6
NO SCALE

REVISIONS:

LAKE HAVASU CITY

ORIGINAL SCALE: 0 1 2 3 4 INCHES

ATKINS
Copyright © Atkins North America, Inc (2014)
4220 CORPORATE CIRCLE, SUITE 200
LAS VEGAS, NV 89114
TEL: +1 (702) 263-7275
FAX: +1 (702) 263-7200
www.atkinsglobal.com

30" DOGHOUSE, 30" MANWAY, VENTS AND MISCELLANEOUS DETAILS ALTERNATIVE 1 & 2

PROJECT: TANK 2A-06 REHAB/REPLACEMENT
LAKE HAVASU CITY, ARIZONA

DESIGNED BY: RKO/RAW
DRAWN BY: RAW

Registered Professional Engineer (Civil) CERTIFICATE NO. 60707 ROMAN K. OBZEJA Date Signed 6-28-16 ARIZONA U.S.A.
EXPIRES 9-11-2018

PROJECT NO. WT6090

DWG NO. CD-5
17 OF 22

Plotted By: WADE5481 Date: 28-Jun-16-05:20
File: H:\Clients\Lake Havasu\100047996 LHC As Needed\02 TANK-2A\CADD\03-Mst\47996 2A CD05.dwg

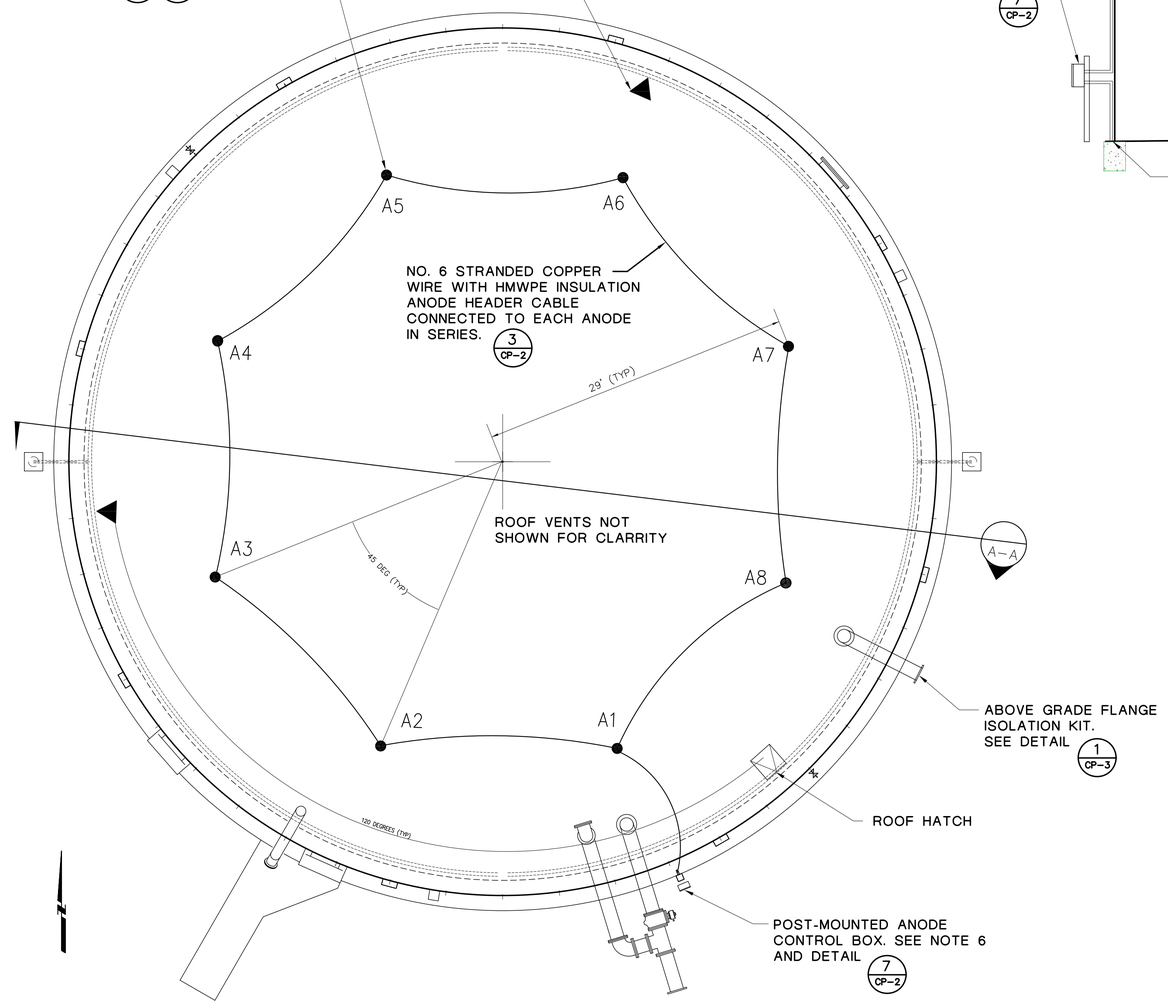

PLAN

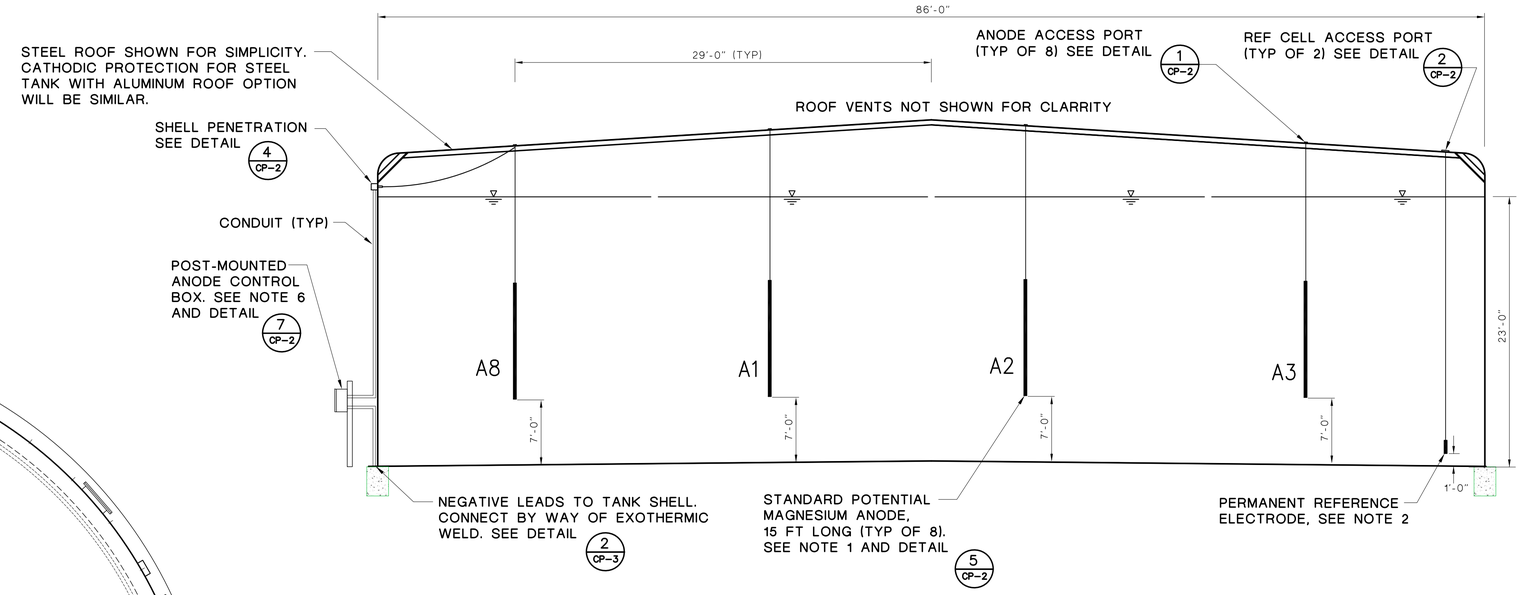

SECTION A-A

LEGEND

- ● ACCESS PORT WITH ANODES AT ACCESS PORT 7' OFF BOTTOM OF RESERVOIR (TYP OF 8) 1/CP-2
- ▲ REFERENCE CELL PORT (TYP OF 2) 2/CP-2

NOTES:

1. ALL 8 ANODES TO BE INSTALLED AT 7' ABOVE RESERVOIR FLOOR
2. TWO PERMANENT REFERENCE ELECTRODES SHALL BE INSTALLED 1' ABOVE RESERVOIR FLOOR AS SHOWN IN RESERVOIR PLAN VIEW. PERMANENT REFERENCE ELECTRODE SHALL HAVE A MINIMUM DESIGN LIFE OF 15 YEARS. RUN REFERENCE CELL LEAD TO ANODE CONTROL BOX, SEE DETAIL 7, SHEET CP-2.
3. SEE SPECIFICATION SECTION 13110, PART 4.2 FOR CATHODIC PROTECTION SYSTEM PERFORMANCE TESTING.
4. ALL HARDWARE, WIRING, AND CATHODIC PROTECTION MATERIALS AND INSTALLATION SHALL BE INSPECTED AND ACCEPTED BY THE ENGINEER PRIOR TO PUTTING THE TANK INTO SERVICE.
5. EXCEPT FOR TESTING PURPOSES, THE CATHODIC PROTECTION ANODES SHALL NOT BE CONNECTED OR ACTIVATED DURING THE COATING WARRANTY PERIOD (TYPICALLY 1 YEAR). AFTER THE COATING WARRANTY PERIOD, THE CATHODIC PROTECTION SYSTEM WILL BE ACTIVATED BY THE CONTRACTOR.
6. UNISTRUT FRAME CAN BE USED IN LIEU OF POST MOUNTING WITH APPROVAL FROM THE ENGINEER. COCNRETE PAD FOR POST MOUNTING NOT SHOWN.
7. NOT ALL YARD PIPING IS SHOWN FOR SIMPLICITY.

TANK 2A CATHODIC PROTECTION SITE PLAN

R F Yeager
ENGINEERING
9562 Winter Gardens, Suite D-151 Ph: 619.647.6265
Lakeside, Ca 92040 Fax: 619.561.0031
Richard F Yeager JR 06.28.2016
Richard F. Yeager Jr Date
Civil Engineer No. C70686 Exp. 06.30.17
NACE Cathodic Protection Specialist No.6321

REVISIONS:

LAKE HAVASU CITY

ATKINS

Copyright © Atkins North America, Inc. (2014)
2700 CORPORATE PORTAL, SUITE 200
HENDERSON, NV 89074
TEL: +1 (702) 263-7275
FAX: +1 (702) 263-7200
www.atkinsglobal.com

ORIGINAL SCALE: 0 1 2 3 4 INCHES

CATHODIC PROTECTION SITE PLAN

PROJECT: TANK 2A-06 REHAB/REPLACEMENT
LAKE HAVASU CITY, ARIZONA

DESIGNED BY: RFYJ
DRAWN BY: BS

Registered Professional Engineer (Civil) CERTIFICATE NO. 60707 ROMAN OBZEJTA Date Signed ARIZONA U.S.A.
EXPIRES 9-11-2018

PROJECT NO. WT6090

DWG NO. CP-1

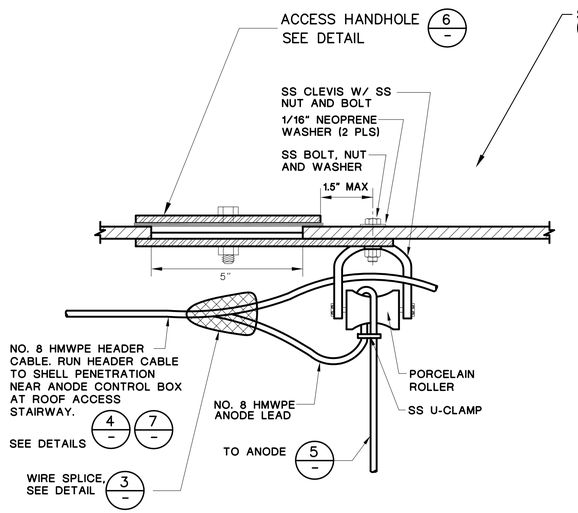

NOTES:

1. ACCESS PORT SHOWN. SIMILAR INSTALLATION FOR BOTH ANODE ACCESS PORT AND REF. CELL ACCESS PORT.
2. ALL STAINLESS STEEL (SST) COMPONENTS SHALL BE TYPE 316.

ANODE ACCESS PORT

DETAIL 1
NO SCALE

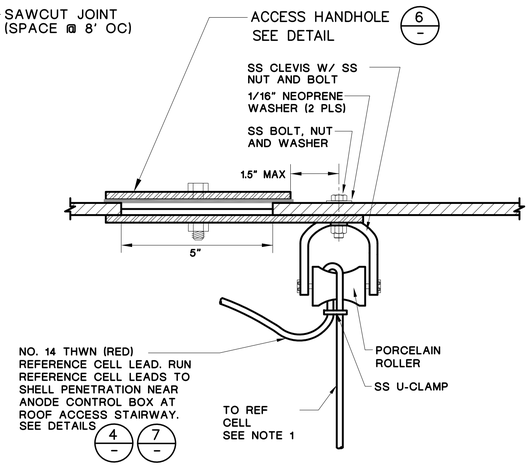

NOTES:

1. TWO COPPER/COPPER SULFATE PERMANENT REFERENCE ELECTRODES SHALL BE INSTALLED 1' ABOVE RESERVOIR FLOOR AS SHOWN IN RESERVOIR PLAN VIEW. PERMANENT REFERENCE ELECTRODE SHALL HAVE A MINIMUM DESIGN LIFE OF 15 YEARS.
2. ALL STAINLESS STEEL (SST) COMPONENTS SHALL BE TYPE 316.

REF CELL ACCESS PORT

DETAIL 2
NO SCALE

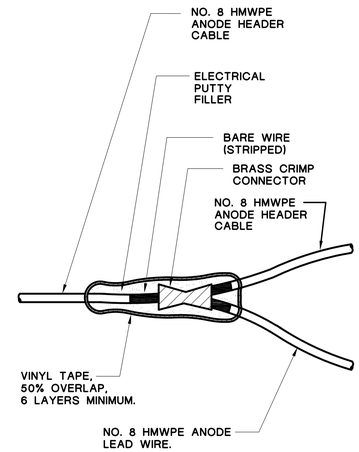

NOTES:

1. ALTERNATE SPLICE METHODS MUST BE SUBMITTED FOR APPROVAL.

ANODE LEAD SPLICE

DETAIL 3
NO SCALE

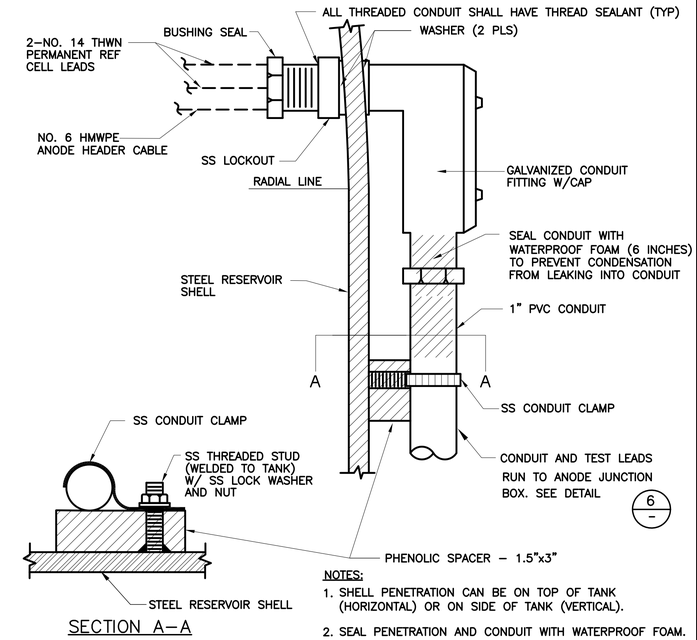

NOTES:

1. SHELL PENETRATION CAN BE ON TOP OF TANK (HORIZONTAL) OR ON SIDE OF TANK (VERTICAL).
2. SEAL PENETRATION AND CONDUIT WITH WATERPROOF FOAM.

SHELL PENETRATION

DETAIL 4
NO SCALE

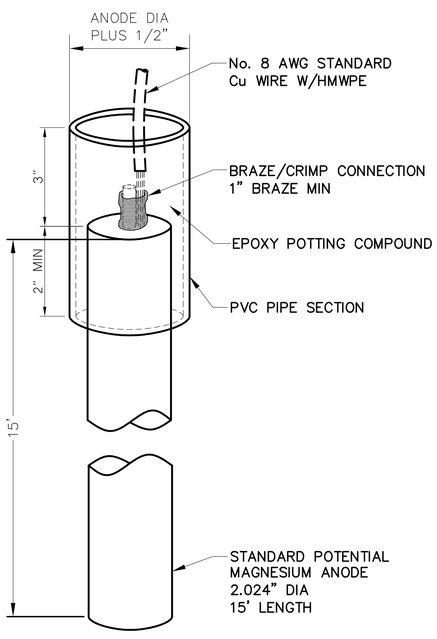

MAGNESIUM ANODE

DETAIL 5
NO SCALE

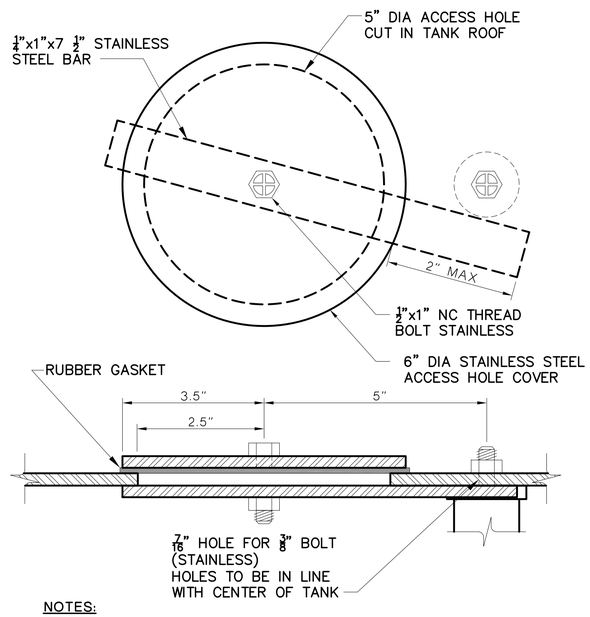

NOTES:

1. ACCESS PORT SHOWN. SIMILAR INSTALLATION FOR BOTH ANODE ACCESS PORT AND REF. CELL ACCESS PORT.
2. ALL STAINLESS STEEL (SST) COMPONENTS SHALL BE TYPE 316.

ACCESS HANDHOLE

DETAIL 6
NO SCALE

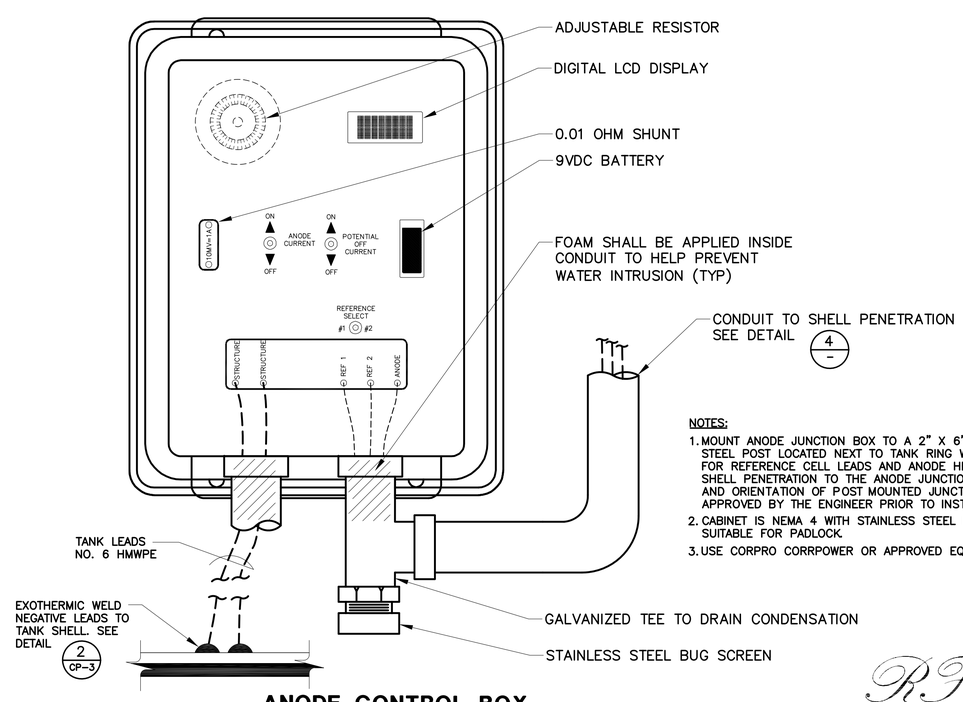

NOTES:

1. MOUNT ANODE JUNCTION BOX TO A 2" X 6' GALVANIZED STEEL POST LOCATED NEXT TO TANK RING WALL. RUN CONDUIT FOR REFERENCE CELL LEADS AND ANODE HEADER CABLE FROM SHELL PENETRATION TO THE ANODE JUNCTION BOX. LOCATION AND ORIENTATION OF POST MOUNTED JUNCTION BOX SHALL BE APPROVED BY THE ENGINEER PRIOR TO INSTALLATION.
2. CABINET IS NEMA 4 WITH STAINLESS STEEL HINGES AND LATCH SUITABLE FOR PADLOCK.
3. USE CORPRO CORRPOWER OR APPROVED EQUAL.

ANODE CONTROL BOX

DETAIL 7
NO SCALE

R.F. Yeager ENGINEERING
9562 Winter Gardens, Suite D-151 Ph: 619.647.6265
Lakeside, Ca 92040 Fax: 619.561.0031
Richard F. Yeager Jr. 06.28.2016
Richard F. Yeager Jr. Date
Civil Engineer No. C70686 Exp. 06.30.17
NACE Cathodic Protection Specialist No.6321

REVISIONS:

LAKE HAVASU CITY

ATKINS
Copyright © Atkins North America, Inc. (2014)
2270 CORPORATE CIRCLE, SUITE 200
HENDERSON, NV 89074
TEL: +1 (702) 263-7275
FAX: +1 (702) 263-7200
www.atkinsglobal.com

ORIGINAL SCALE: 0 1 2 3 INCHES

CATHODIC PROTECTION DETAILS

PROJECT: TANK 2A-06 REHAB/REPLACEMENT
LAKE HAVASU CITY, ARIZONA

DESIGNED BY: RFYJ
DRAWN BY: BS

Registered Professional Engineer (Civil) CERTIFICATE NO. 60707 ROMAN OBZEJTA Date Signed ARIZONA U.S.A.
EXPIRES 9-11-2018

PROJECT NO. WT6090

DWG NO. CP-2

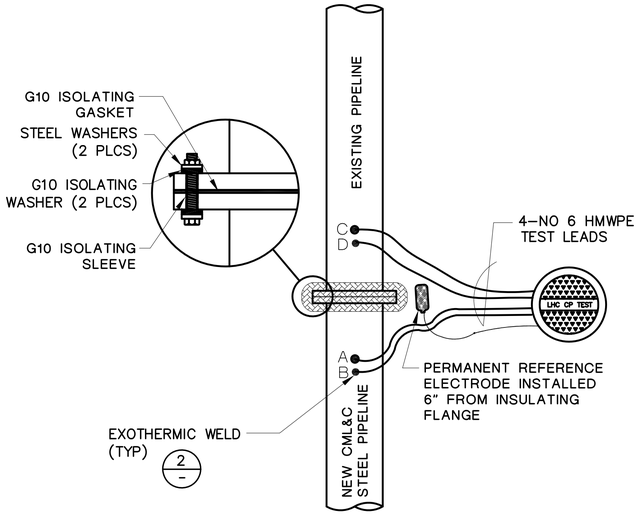

PLAN

BURIED FLANGE ISOLATION

DETAIL 1
NO SCALE

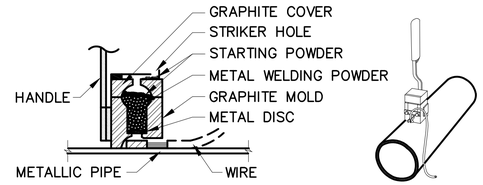

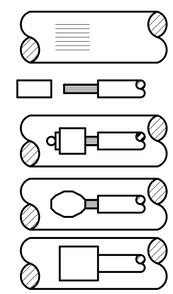

STEP 1. FILE STRUCTURE CONNECTION AREA (3 IN. x 3 IN.) TO BARE SHINY METAL AND CLEAN.

STEP 2. STRIP INSULATION FROM WIRE.

STEP 3. HOLD MOLD FIRMLY WITH OPENING AWAY FROM OPERATOR AND IGNITE WITH STRIKER.

STEP 4. REMOVE SLAG FROM CONNECTION AND PEEN WELD FOR SOUNDNESS.

STEP 5. COVER CONNECTION AND EXPOSED STRUCTURE SURFACE WITH A BITUMINOUS COATING COMPOUND. PLACE PLASTIC SHIELD CAP FIRMLY OVER CONNECTION.

EXOTHERMIC WELD NOTES:

1. ONE WELD SHALL BE USED FOR EACH.
2. CLEAN OILY OR GREASY CABLE WITH A RAPID–DRYING SOLVENT. REMOVE ONLY ENOUGH INSULATION FROM THE CABLE TO ALLOW THE EXOTHERMIC WELD CONNECTION TO BE MADE.
3. REMOVE ALL COATING, DIRT, GRIME, AND GREASE FROM THE METAL STRUCTURE AT WELD LOCATIONS BY WIRE BRUSHING AND/OR USE OF SUITABLE SAFE SOLVENTS. CLEAN THE STRUCTURE TO A BRIGHT, SHINY SURFACE FREE OF ALL SERIOUS PITS AND FLAWS. THE AREA OF THE STRUCTURE WHERE THE ATTACHMENT IS TO BE MADE MUST BE DRY.
4. OPEN WELD MOLD AND PLACE METAL DISC INSIDE AT BOTTOM OF MOLD. POUR METAL WELDING POWDER INTO MOLD AND ON TOP OF METAL DISC. STARTING POWDER IS CAKED AT THE BOTTOM OF THE WELD CHARGE CONTAINER. TAP WELD CHARGE CONTAINER AND POUR HALF OF STARTING POWDER INTO WELD MOLD. CLOSE THE TOP OF WELD MOLD AND POUR THE REMAINING STARTING POWDER IN STRIKING HOLE. THE WELD MOLD IS NOW LOADED AND READY FOR USE.
5. THE LEAD WIRE IS TO BE HELD AT AN ANGLE TO THE SURFACE WHEN WELDING. ONLY ONE WIRE SHALL BE ATTACHED WITH EACH WELD. HOLD LOADED WELD MOLD FIRMLY ON PIPE AND WIRE. IGNITE STARTING POWDER IN STRIKING HOLE USING A STRIKER. HOLD WELD MOLD FIRMLY AGAINST PIPE FOR 5 SECONDS TO ALLOW FOR WELD PROCESS.
6. WELDS SHALL BE TESTED BY STRIKING THE WELD NUGGET WITH A TWO POUND HAMMER WHILE PULLING FIRMLY ON THE WIRE. ALL UNSOUND WELDS SHALL BE REMOVED, THE SURFACES RECLEANED, REWELDED, AND RETESTED. WELD SLAG SHALL BE REMOVED.
7. APPLY PRIMER AND ELASTOMERIC WELD CAP TO THE WELD AND APPLY A BITUMASTIC COATING MATERIAL TO ALL EXPOSED AREAS AROUND THE CAP AND WIRES IN ACCORDANCE WITH THE MANUFACTURER'S RECOMMENDATIONS. THE COATING SHALL OVERLAP THE STRUCTURE COATING A MINIMUM OF 3 INCHES.

EXOTHERMIC WELD

DETAIL 2
NO SCALE

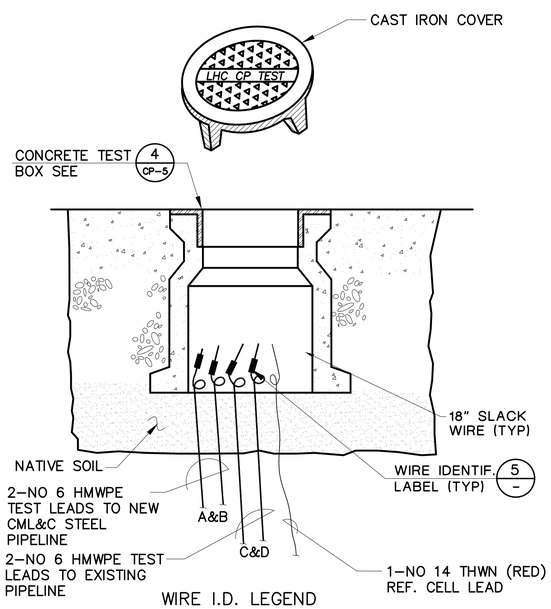

WIRE I.D. LEGEND

WIRE	SIZE	LABEL INSCRIPTION
A&B	NO 6 HMWPE	CML&C STL
C&D	NO 6 HMWPE	EXISTING PIPELINE

TEST BOX WIRING

DETAIL 3
NO SCALE

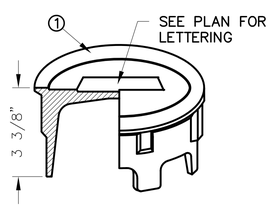

TEST BOX COVER ISOMETRIC

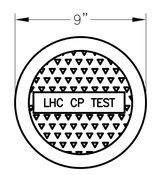

TEST BOX COVER PLAN

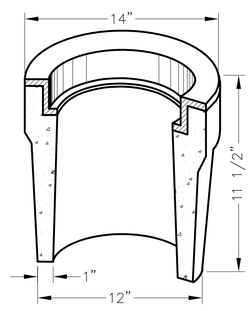

TEST BOX ISOMETRIC SECTION

MATERIALS:

1. COVER: ASTM A 48 CLASS 30.

NOTES:

1. THE COVER SHALL HAVE CASTED MARKING IN 1/2" HIGH RAISED LETTERS.
2. RING AND COVER SHALL BE H–20 TRAFFIC RATED.

CONCRETE TEST BOX

DETAIL 4
NO SCALE

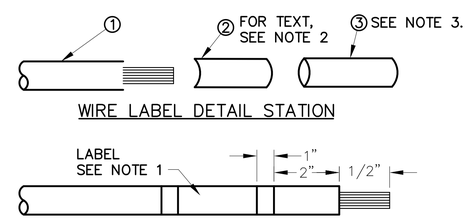

WIRE LABEL DETAIL STATION

WIRE LABEL

CPTS# (CATHODIC PROTECTION TEST STATION NUMBERING)
CPTS#1, 2, 3, ...N

NOTES:

1. CABLES SHALL BE TAGGED USING TIMES ROMAN 10 POINT FONT.
2. TEXT SHALL BE PRESENTED IN THE FOLLOWING ORDER:
   - TYPE OF INSTALLATION
   - STATIONING
   - PIPE DIAMETER
   - PIPE MATERIAL
   - WIRE DIRECTIONAL ORIENTATION
     - NORTH
     - SOUTH
     - EAST
     - WEST
3. PLACE SLEEVE AFTER ATTACHMENT OF LABEL TO CABLE.
4. BRASS TAGS MAY BE USED WITH APPROVAL FROM THE ENGINEER.

MATERIALS:

1. CABLE: AWG ASTM B8 & B3.
2. LABEL: FILE FOLDER, SELF ADHESIVE WHITE 2/3" X 3 7/16"
3. SLEEVE: HEAT SHRINK, POLYOLEFIN, CLEAR THIN WALL TUBING.

WIRE IDENTIFICATION

DETAIL 5
NO SCALE

GENERAL CATHODIC PROTECTION NOTES:

1. ALL MATERIALS AND INSTALLATION SHALL BE IN ACCORDANCE WITH THESE DRAWINGS AND TECHNICAL SPECIFICATIONS.
2. UNLESS OTHERWISE NOTED DRAWINGS ARE NOT SHOWN TO SCALE.
3. ALL TEST STATIONS SHALL BE THE CIRCULAR, CONCRETE, AT–GRADE TYPE WITH A METAL LID AND H–20 TRAFFIC RATED.
   A. PROVIDE 18" SLACK WIRE AT WELD TO PIPE AND COILED IN TEST BOX.
   B. BOTTOM OF TEST BOX SHALL BE NATIVE SOIL.
   C. A REINFORCED CONCRETE PAD (24" SQUARE X 4" THICK) IS REQUIRED AROUND TEST BOXES LOCATED IN UNPAVED AREAS.
   D. IDENTIFY ALL WIRES AS SHOWN ON DETAIL 3 THIS SHEET.
4. THE CONTRACTOR IS RESPONSIBLE FOR VERIFYING THE LOCATION OF ADJACENT STRUCTURES AND UTILITIES AND FOR AVOIDING DAMAGE TO AND CONFLICT WITH THESE STRUCTURES OR UTILITIES.
5. THE CONTRACTOR SHALL DOCUMENT ALL CHANGES FROM THESE DRAWINGS AND SUBMIT 'AS-BUILT' DRAWINGS TO THE ENGINEER PRIOR TO COMPLETION OF THE WORK.
6. NO WIRE OR CABLE SPLICES ARE PERMITTED EXCEPT AS INDICATED IN THE DRAWINGS OR AS SPECIFICALLY APPROVED BY THE ENGINEER.

R F Yeager ENGINEERING
9562 Winter Gardens, Suite D-151 Ph: 619.647.6265
Lakeside, Ca 92040 Fax: 619.561.0031
Richard F Yeager JR 06.28.2016
Richard F. Yeager Jr. Date
Civil Engineer No. C70686 Exp. 06.30.17
NACE Cathodic Protection Specialist No.6321

REVISIONS:

LAKE HAVASU CITY

ATKINS
Copyright © Atkins North America, Inc (2014)
2270 CORPORATE CIRCLE, SUITE 200
HENDERSON, NV 89074
TEL: +1 (702) 263-7275
FAX: +1 (702) 263-7200
www.atkinsglobal.com

ORIGINAL SCALE: 0 1 2 3 4 INCHES

CATHODIC PROTECTION DETAILS

PROJECT: TANK 2A-06 REHAB/REPLACEMENT
LAKE HAVASU CITY, ARIZONA

DESIGNED BY: RFYJ
DRAWN BY: BS

Registered Professional Engineer (Civil) CERTIFICATE NO. 60707 ROMAN OBZEJTA Date Signed ARIZONA U.S.A.
EXPIRES 9–11–2018

PROJECT NO. WT6090

DWG NO. CP-3

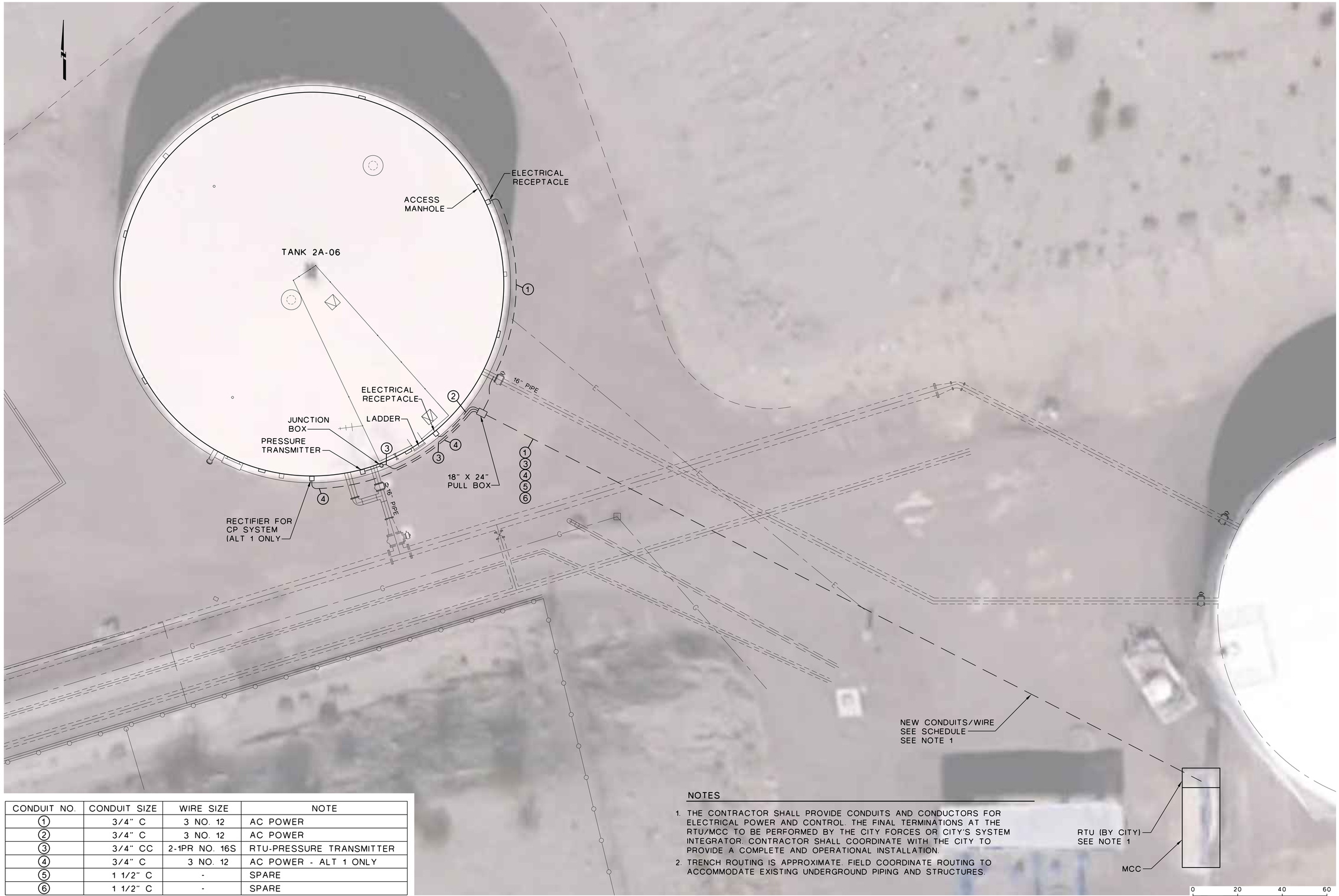

CONDUIT NO.	CONDUIT SIZE	WIRE SIZE	NOTE
1	3/4" C	3 NO. 12	AC POWER
2	3/4" C	3 NO. 12	AC POWER
3	3/4" CC	2-1PR NO. 16S	RTU-PRESSURE TRANSMITTER
4	3/4" C	3 NO. 12	AC POWER - ALT 1 ONLY
5	1 1/2" C	-	SPARE
6	1 1/2" C	-	SPARE

NOTES

1. THE CONTRACTOR SHALL PROVIDE CONDUITS AND CONDUCTORS FOR ELECTRICAL POWER AND CONTROL. THE FINAL TERMINATIONS AT THE RTU/MCC TO BE PERFORMED BY THE CITY FORCES OR CITY'S SYSTEM INTEGRATOR. CONTRACTOR SHALL COORDINATE WITH THE CITY TO PROVIDE A COMPLETE AND OPERATIONAL INSTALLATION.
2. TRENCH ROUTING IS APPROXIMATE. FIELD COORDINATE ROUTING TO ACCOMMODATE EXISTING UNDERGROUND PIPING AND STRUCTURES.

PLAN
1"=20'

REVISIONS:

LAKE HAVASU CITY

ATKINS

Copyright © Atkins North America, Inc (2014)
22701 CORPORATE CIRCLE, SUITE 200
PEORIA, ARIZONA 85383
TEL: +1 (702) 263-7275
FAX: +1 (702) 263-7200
www.atkinsglobal.com

ORIGINAL SCALE: 0 1" 2" 3" 4" INCHES

ELECTRICAL SITE PLAN
ALTERNATIVE 2 (STEEL TANK REPLACEMENT)

PROJECT:
TANK 2A-06 REHAB/REPLACEMENT
LAKE HAVASU CITY, ARIZONA

DESIGNED BY: RKO/RAW
DRAWN BY: RAW

Registered Professional Engineer (Civil)
CERTIFICATE NO. 60707
ROMAN K. OBZEJTA
Date Signed 6-26-15
ARIZONA U.S.A.
EXPIRES 9-11-2018

PROJECT NO.
WT6090

DWG NO.
E-1
21 OF 22

Plotted By: WADE5481 Date: 28-Jun-16-05:22
File: H:\Clients\Lake Havasu\100047996 LHC As Needed\02 TANK-2A\CADD\03-Mst\47996 2A E01.dwg

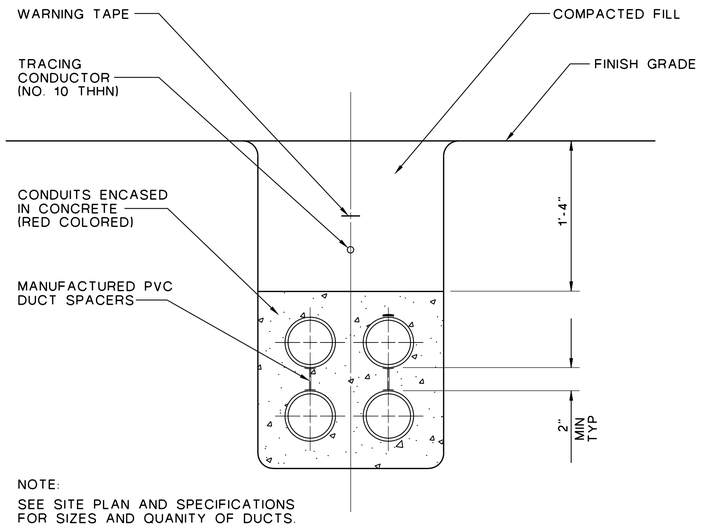

NOTE:
SEE SITE PLAN AND SPECIFICATIONS FOR SIZES AND QUANITY OF DUCTS.

DUCT BANK

DETAIL 1
NO SCALE

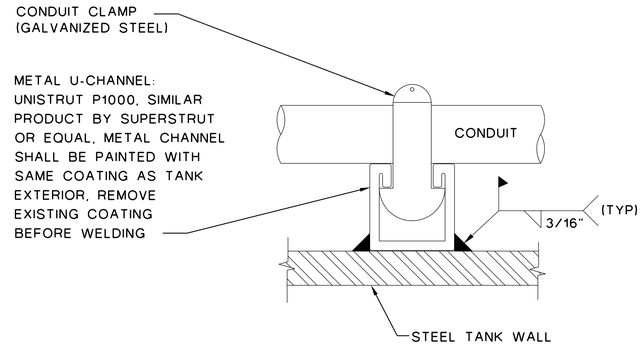

PLAN VIEW

CONDUIT MOUNTING ON STEEL SURFACES

DETAIL 2
1/4"=1'-0"

REVISIONS:

LAKE HAVASU CITY

ORIGINAL SCALE: 0 1 2 3 4 INCHES

ATKINS

Copyright © Atkins North America, Inc (2014)
2270 CORPORATE CIRCLE, SUITE 200
HENDERSON, NV 89074
TEL: +1 (702) 263-7275
FAX: +1 (702) 263-7200
www.atkinsglobal.com

ELECTRICAL DETAILS

PROJECT:
TANK 2A-06 REHAB/REPLACEMENT
LAKE HAVASU CITY, ARIZONA

DESIGNED BY: RKO/RAW
DRAWN BY: RAW

Registered Professional Engineer (Civil)
CERTIFICATE NO. 59702
ROMAN DEZZUTTA
Date Signed 6-28-16
ARIZONA, U.S.A.
EXPIRES 9-11-2018

PROJECT NO.
WT6090

DWG NO.
E-2
22 OF 22

Plotted By: WADE5481 Date: 28-Jun-16-05:23
File: H:\Clients\Lake Havasu\100047996 LHC As Needed\02 TANK-2A\CADD\03-Msl\47996 2A E02.dwg