LAKE HAVASU CITY, ARIZONA
WAYFINDING & SIGNAGE PROGRAM

PROJECT NO. ST3230RB

NOVEMBER 2016

ARIZONA BLUE STAKE
Dial 811 or
602-263-1100
1-800-STAKE-IT

NO.	REVISIONS / SUBMISSIONS	DATE
#	-	-
#	-	-
#	-	-
#	-	-

LAKE HAVASU CITY

UTILITY CONTACTS

LAKE HAVASU CITY (WASTEWATER)	(928) 855-3999
LAKE HAVASU CITY (WATER)	(928) 855-2618
SUDDEN LINK	(928) 855-9855
FRONTIER COMMUNICATION	(928) 453-0541
UNISOURCE ENERGY SERVICES (GAS)	(928) 505-7025
UNISOURCE ENERGY SERVICES (ELECTRIC)	(928) 505-7031

LAKE HAVASU CITY

CITY COUNCIL

MARK S. NEXSEN	MAYOR
DON CALLAHAN	VICE MAYOR
DEAN BARLOW	COUNCIL MEMBER
DONNA BRISTER	COUNCIL MEMBER
MICHELE LIN	COUNCIL MEMBER
CAL SHEEHY	COUNCIL MEMBER
JENI COKE	COUNCIL MEMBER

PROJECT MANAGER

JEREMY ABBOTT P.E.

VICINITY MAP

DRAWING INDEX

DWG NO	SHEET NO	DESCRIPTION
1	1	COVER SHEET
2–5	2–5	HIGHWAY SIGN MESSAGE DETAILS
6–12	6–12	LAKE HAVASU CITY SIGN MESSAGE DETAILS
13	13	GATEWAYS
A.2–A.7	14–19	SIGN GRAPHIC STANDARDS
B.1–B.4	20–23	SIGN TYPES
C.1–C.18	24–41	DESIGN INTENT DRAWINGS
E.1–E.22	42–63	CONSTRUCTION DETAILS
F.1–F.6	64–69	PERFORMANCE SPECIFICATIONS

AZ 95 TRAFFIC INTERSECTIONS

LONDON BRIDGE ROAD
AIRPORT CENTRE BOULEVARD
PALO VERDE BOULEVARD NORTH
WEST ACOMA BOULEVARD
INDUSTRIAL BOULEVARD
PALO VERDE BOULEVARD SOUTH
MESQUITE AVENUE
SWANSON AVENUE
PARK AVENUE
MULBERRY AVENUE
McCULLOCH BOULEVARD SOUTH
DUB CAMPBELL PARKWAY

LEGEND

—EXISTING SIGN

—NEW SIGN OR REPLACE EXISTING SIGN

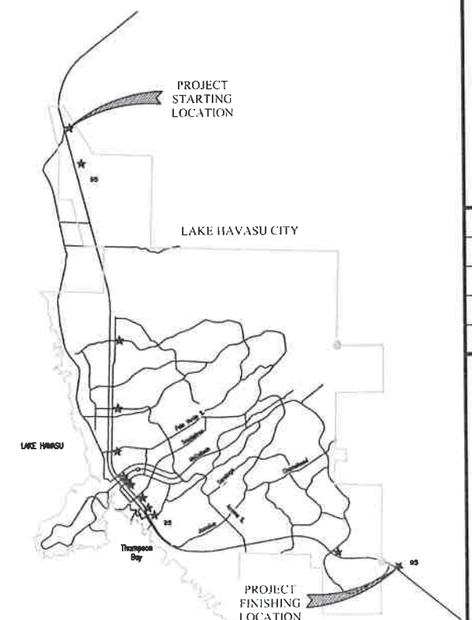

LOCATION MAP

ST3230 WAYFINDING AND SIGNAGE PROGRAM

COVER SHEET

Designed by:
Drawn by: GH & TT
Checked by: JA
Date: 11/2016
Dwg scale: NTS

REGISTERED PROFESSIONAL ENGINEER (CIVIL)
54390
JEREMY J. ABBOTT
Date Signed 11-1-16
ARIZONA U.S.A.

EXPIRES 03-31-19

Sheet Number:
1

Sheet 1 of 69

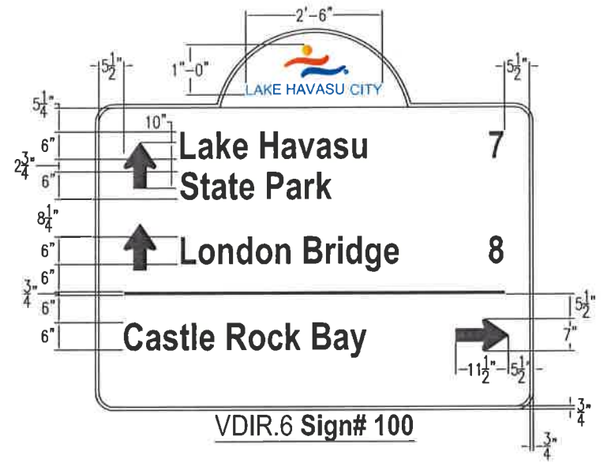

VDIR.6 **Sign# 100**

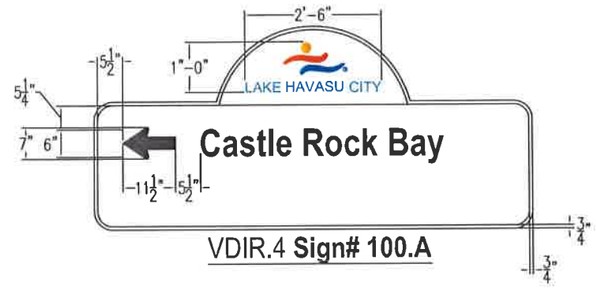

VDIR.4 **Sign# 100.A**

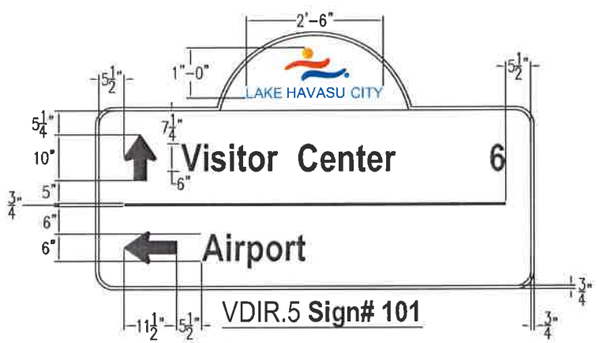

VDIR.5 **Sign# 101**

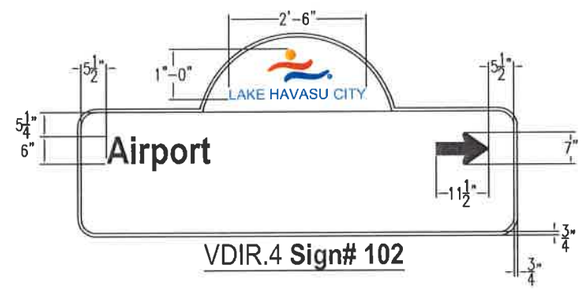

VDIR.4 **Sign# 102**

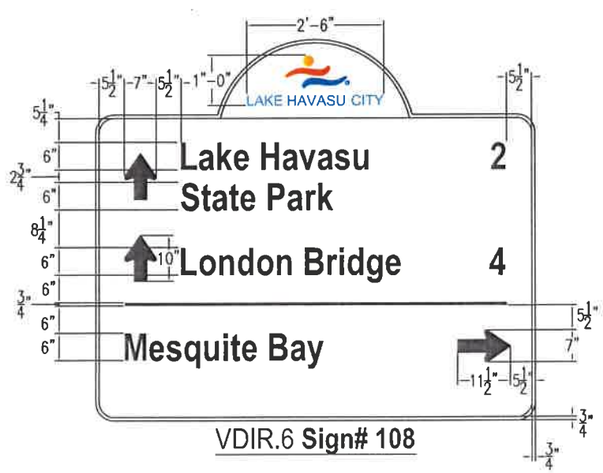

VDIR.6 **Sign# 108**

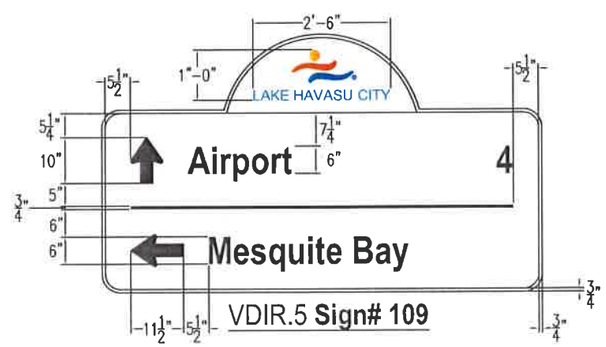

VDIR.5 **Sign# 109**

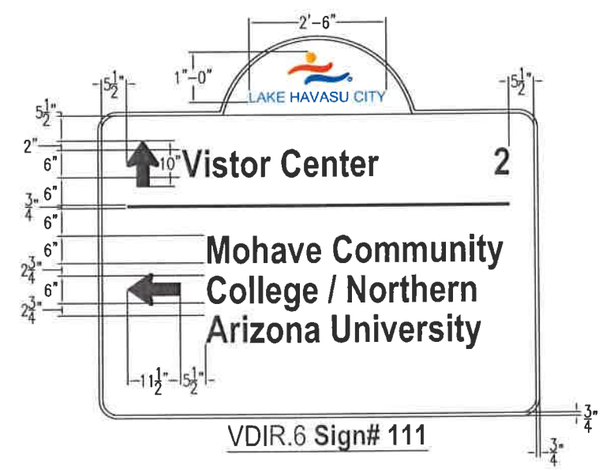

VDIR.6 **Sign# 111**

GENERAL NOTES:

1. MESSAGES SHOWN ARE ACTUAL MESSAGES. HIGHWAY GOTHIC SERIES B OR SERIES C.
2. PANEL LAYOUTS FOR ALL SIGN LOCATIONS SHALL BE INCLUDED IN SHOP DRAWING FOR REVIEW BY ENGINEER.
3. FABRICATOR SHALL VERIFY THE MOUNTING CONDITIONS AND PROVIDE A DETAIL DRAWING FOR EACH MOUNTING SITUATION, PRIOR TO FABRICATION. FABRICATOR SHALL OBTAIN APPROVAL FROM THE ENGINEER FOR PLACEMENT PRIOR TO FABRICATION.
4. WELDS: ALL WELD SHALL BE GROUND SMOOTH, PAINT ALL SEEMS.
5. HARDWARE: ALL FASTENERS SHALL BE CONCEALED. IF EXPOSED, HARDWARE SHALL BE TAMPER PROOF FASTENERS, CORROSION RESISTANT, AND COLOR MATCHING ADJACENT SURFACES.
6. ALL PAINTED SIGN SURFACES TO RECEIVE UV.ANTI-GRAFFITI SPRAY COATING. ALL SIGN SURFACES WITH REFLECTIVE GRAPHICS TO RECEIVE 3M APPROVED UV/ANTI-GRAFFITI OVERLAMINATE.
7. THESE DRAWINGS ARE MEANT FOR DESIGN INTENT ONLY AND ARE NOT FOR CONSTRUCTION. CONTRACTOR SHALL VERIFY AND BE RESPONSIBLE FOR ALL DIMENSION AND CONDITIONS OF THE JOB. CONTRACTOR SHALL BE FAMILIAR WITH THE SITE AND CONDITIONS IT PRESENTS. THE ENGINEER MUST BE NOTIFIED OF ANY VARIATIONS FROM THE DIMENSIONS AND CONDITIONS SHOWN ON THIS DRAWING. SHOP DRAWINGS AND DETAILS MUST BE SUBMITTED TO THE ENGINEER FOR APPROVAL PRIOR TO PROCEEDING WITH FABRICATION. ALL COPY SHALL BE PROOFREAD BY THE ENGINEER AND LEGAL REQUIREMENTS CHECKED BY LEGAL DEPARTMENT.

NO.	REVISIONS / SUBMISSIONS	DATE
#	-	-
#	-	-
#	-	-
#	-	-

LAKE HAVASU CITY

ST3230 WAYFINDING AND SIGNAGE PROGRAM

SIGN PANEL LAYOUTS

Designed by:

Drawn by: GH & TT

Checked by: JA

Date: 11/2016

Dwg scale: N.T.S.

REGISTERED PROFESSIONAL ENGINEER (CIVIL) No. 54390 JEREMY J. ABBOTT Date Signed 11-1-16 ARIZONA U.S.A.

EXPIRES 03-31-19

Sheet Number:

2

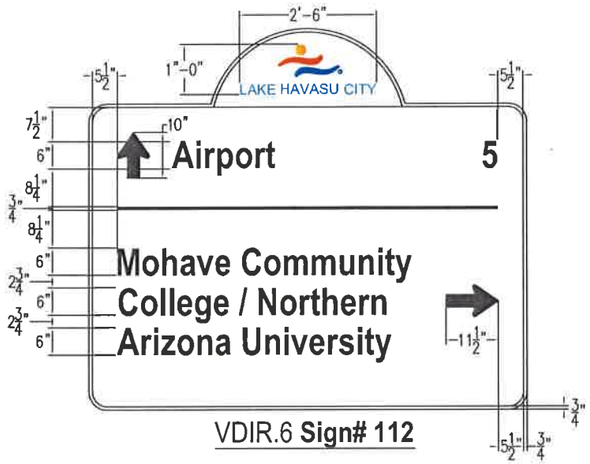

VDIR.6 **Sign# 112**

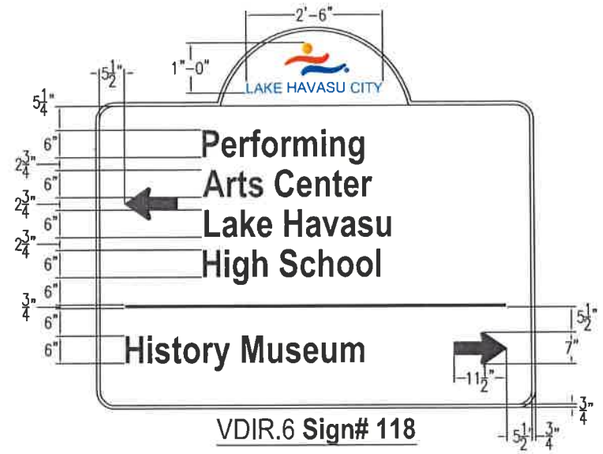

VDIR.6 **Sign# 118**

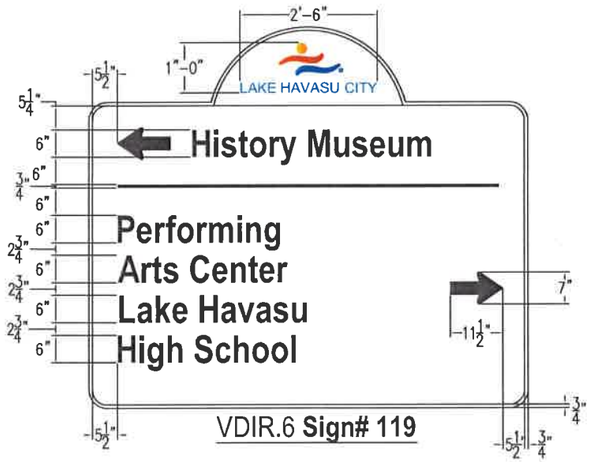

VDIR.6 **Sign# 119**

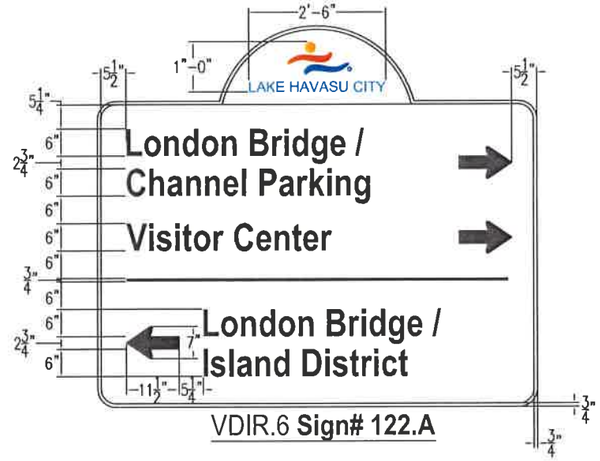

VDIR.6 **Sign# 122.A**

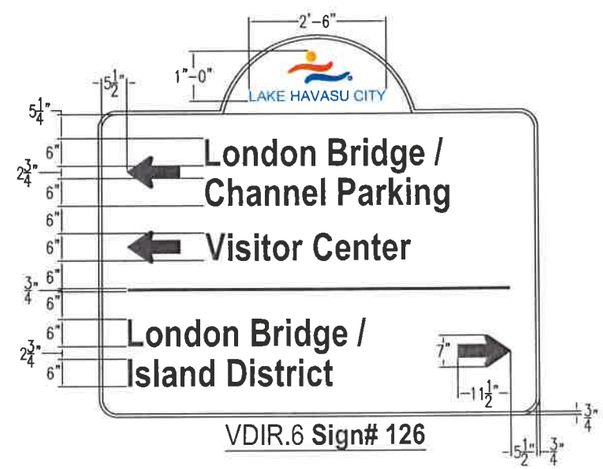

VDIR.6 **Sign# 126**

GENERAL NOTES:

1. MESSAGES SHOWN ARE ACTUAL MESSAGES. HIGHWAY GOTHIC SERIES B OR SERIES C.
2. PANEL LAYOUTS FOR ALL SIGN LOCATIONS SHALL BE INCLUDED IN SHOP DRAWING FOR REVIEW BY ENGINEER.
3. FABRICATOR SHALL VERIFY THE MOUNTING CONDITIONS AND PROVIDE A DETAIL DRAWING FOR EACH MOUNTING SITUATION, PRIOR TO FABRICATION. FABRICATOR SHALL OBTAIN APPROVAL FROM THE ENGINEER FOR PLACEMENT PRIOR TO FABRICATION.
4. WELDS: ALL WELD SHALL BE GROUND SMOOTH, PAINT ALL SEEMS.
5. HARDWARE: ALL FASTENERS SHALL BE CONCEALED. IF EXPOSED, HARDWARE SHALL BE TAMPER PROOF FASTENERS, CORROSION RESISTANT, AND COLOR MATCHING ADJACENT SURFACES.
6. ALL PAINTED SIGN SURFACES TO RECEIVE UV.ANTI-GRAFFITI SPRAY COATING. ALL SIGN SURFACES WITH REFLECTIVE GRAPHICS TO RECEIVE 3M APPROVED UV/ANTI-GRAFFITI OVERLAMINATE.
7. THESE DRAWINGS ARE MEANT FOR DESIGN INTENT ONLY AND ARE NOT FOR CONSTRUCTION. CONTRACTOR SHALL VERIFY AND BE RESPONSIBLE FOR ALL DIMENSION AND CONDITIONS OF THE JOB. CONTRACTOR SHALL BE FAMILIAR WITH THE SITE AND CONDITIONS IT PRESENTS. THE ENGINEER MUST BE NOTIFIED OF ANY VARIATIONS FROM THE DIMENSIONS AND CONDITIONS SHOWN ON THIS DRAWING. SHOP DRAWINGS AND DETAILS MUST BE SUBMITTED TO THE ENGINEER FOR APPROVAL PRIOR TO PROCEEDING WITH FABRICATION. ALL COPY SHALL BE PROOFREAD BY THE ENGINEER AND LEGAL REQUIREMENTS CHECKED BY LEGAL DEPARTMENT.

NO.	REVISIONS / SUBMISSIONS	DATE
#	-	-
#	-	-
#	-	-
#	-	-

LAKE HAVASU CITY

ST3230 WAYFINDING AND SIGNAGE PROGRAM

SIGN PANEL LAYOUTS

Designed by:

Drawn by: GH & TT

Checked by: JA

Date: 11/2016

Dwg scale: N.T.S.

REGISTERED PROFESSIONAL ENGINEER (CIVIL) CERTIFICATE NO. 54390 JEREMY J. ABBOTT Date Signed 11-1-16 ARIZONA U.S.A.

EXPIRES 03-31-19

Sheet Number:

3

Sheet 3 of 69

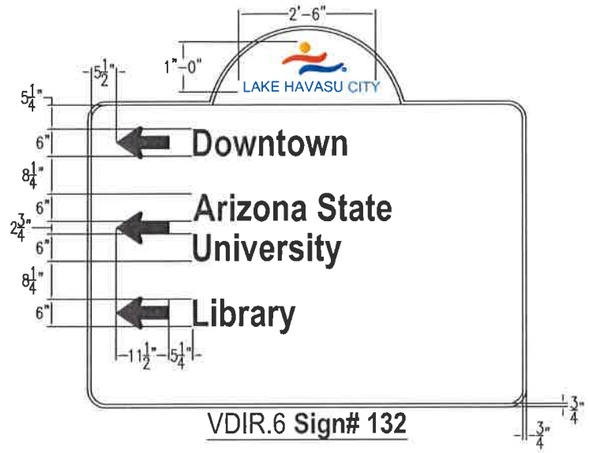

VDIR.6 **Sign# 132**

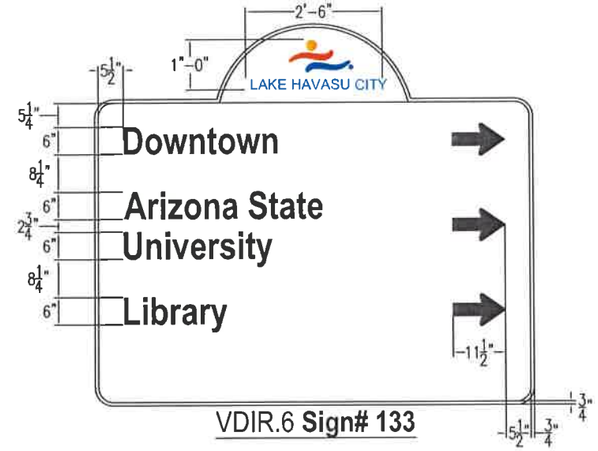

VDIR.6 **Sign# 133**

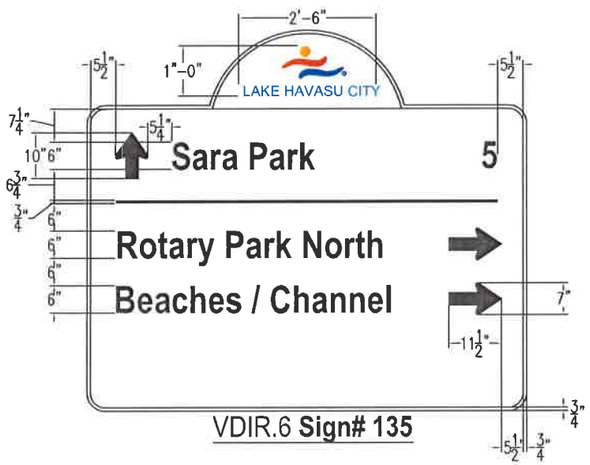

VDIR.6 **Sign# 135**

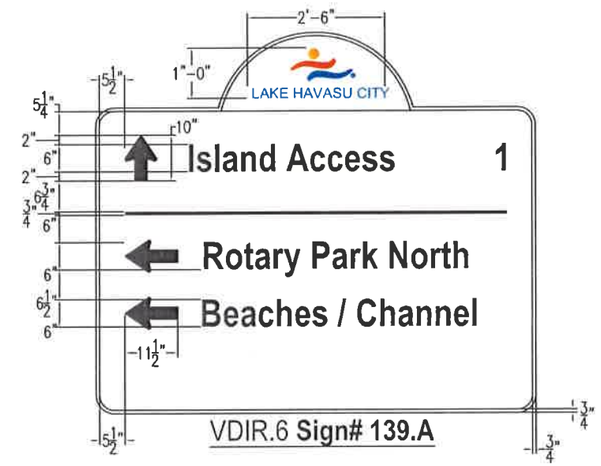

VDIR.6 **Sign# 139.A**

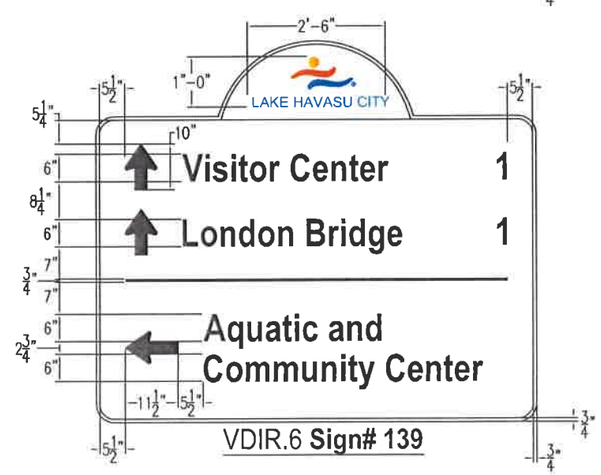

VDIR.6 **Sign# 139**

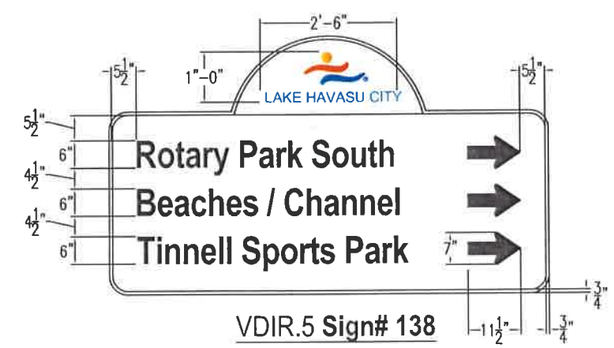

VDIR.5 **Sign# 138**

GENERAL NOTES:

1. MESSAGES SHOWN ARE ACTUAL MESSAGES. HIGHWAY GOTHIC SERIES B OR SERIES C.
2. PANEL LAYOUTS FOR ALL SIGN LOCATIONS SHALL BE INCLUDED IN SHOP DRAWING FOR REVIEW BY ENGINEER.
3. FABRICATOR SHALL VERIFY THE MOUNTING CONDITIONS AND PROVIDE A DETAIL DRAWING FOR EACH MOUNTING SITUATION, PRIOR TO FABRICATION. FABRICATOR SHALL OBTAIN APPROVAL FROM THE ENGINEER FOR PLACEMENT PRIOR TO FABRICATION.
4. WELDS: ALL WELD SHALL BE GROUND SMOOTH, PAINT ALL SEEMS.
5. HARDWARE: ALL FASTENERS SHALL BE CONCEALED. IF EXPOSED, HARDWARE SHALL BE TAMPER PROOF FASTENERS, CORROSION RESISTANT, AND COLOR MATCHING ADJACENT SURFACES.
6. ALL PAINTED SIGN SURFACES TO RECEIVE UV.ANTI-GRAFFITI SPRAY COATING. ALL SIGN SURFACES WITH REFLECTIVE GRAPHICS TO RECEIVE 3M APPROVED UV/ANTI-GRAFFITI OVERLAMINATE.
7. THESE DRAWINGS ARE MEANT FOR DESIGN INTENT ONLY AND ARE NOT FOR CONSTRUCTION. CONTRACTOR SHALL VERIFY AND BE RESPONSIBLE FOR ALL DIMENSION AND CONDITIONS OF THE JOB. CONTRACTOR SHALL BE FAMILIAR WITH THE SITE AND CONDITIONS IT PRESENTS. THE ENGINEER MUST BE NOTIFIED OF ANY VARIATIONS FROM THE DIMENSIONS AND CONDITIONS SHOWN ON THIS DRAWING. SHOP DRAWINGS AND DETAILS MUST BE SUBMITTED TO THE ENGINEER FOR APPROVAL PRIOR TO PROCEEDING WITH FABRICATION. ALL COPY SHALL BE PROOFREAD BY THE ENGINEER AND LEGAL REQUIREMENTS CHECKED BY LEGAL DEPARTMENT.

NO.	REVISIONS / SUBMISSIONS	DATE
#	-	-
#	-	-
#	-	-
#	-	-

LAKE HAVASU CITY

ST3230 WAYFINDING AND SIGNAGE PROGRAM

SIGN PANEL LAYOUTS

Designed by:

Drawn by: GH & TT

Checked by: JA

Date: 11/2016

Dwg scale: N.T.S.

REGISTERED PROFESSIONAL ENGINEER (CIVIL) CERTIFICATE NO. 54390 JEREMY J. ABBOTT Date Signed 11-1-16 ARIZONA U.S.A.

EXPIRES 03-31-19

Sheet Number:

4

Sheet 4 of 69

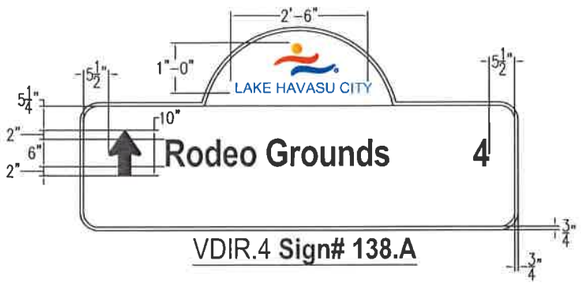

VDIR.4 **Sign# 138.A**

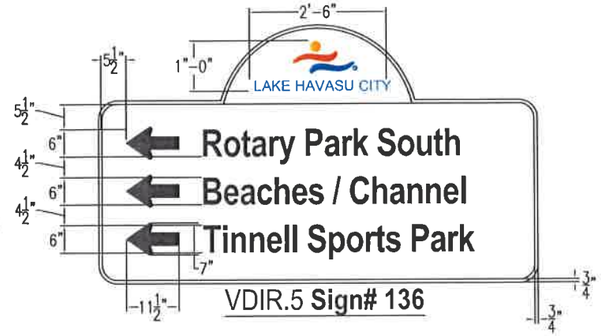

VDIR.5 **Sign# 136**

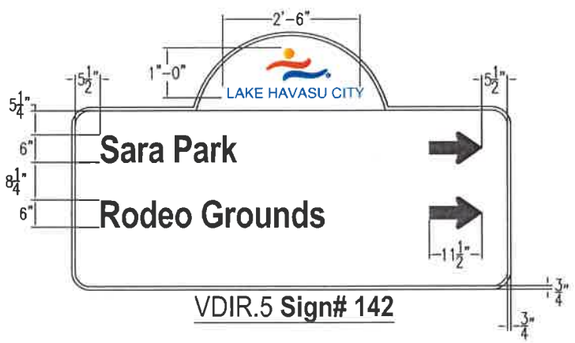

VDIR.5 **Sign# 142**

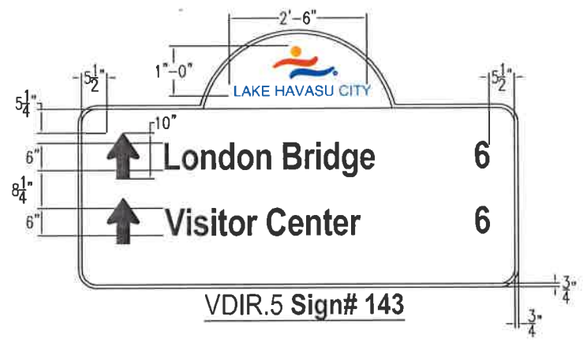

VDIR.5 **Sign# 143**

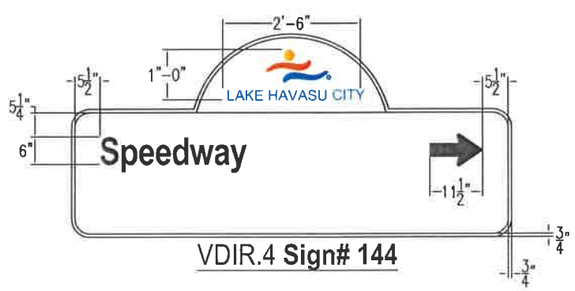

VDIR.4 **Sign# 144**

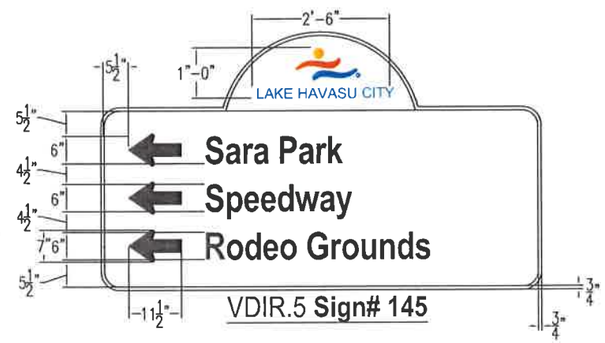

VDIR.5 **Sign# 145**

GENERAL NOTES:

1. MESSAGES SHOWN ARE ACTUAL MESSAGES. HIGHWAY GOTHIC SERIES B OR SERIES C.
2. PANEL LAYOUTS FOR ALL SIGN LOCATIONS SHALL BE INCLUDED IN SHOP DRAWING FOR REVIEW BY ENGINEER.
3. FABRICATOR SHALL VERIFY THE MOUNTING CONDITIONS AND PROVIDE A DETAIL DRAWING FOR EACH MOUNTING SITUATION, PRIOR TO FABRICATION. FABRICATOR SHALL OBTAIN APPROVAL FROM THE ENGINEER FOR PLACEMENT PRIOR TO FABRICATION.
4. WELDS: ALL WELD SHALL BE GROUND SMOOTH, PAINT ALL SEEMS.
5. HARDWARE: ALL FASTENERS SHALL BE CONCEALED. IF EXPOSED, HARDWARE SHALL BE TAMPER PROOF FASTENERS, CORROSION RESISTANT, AND COLOR MATCHING ADJACENT SURFACES.
6. ALL PAINTED SIGN SURFACES TO RECEIVE UV.ANTI-GRAFFITI SPRAY COATING. ALL SIGN SURFACES WITH REFLECTIVE GRAPHICS TO RECEIVE 3M APPROVED UV/ANTI-GRAFFITI OVERLAMINATE.
7. THESE DRAWINGS ARE MEANT FOR DESIGN INTENT ONLY AND ARE NOT FOR CONSTRUCTION. CONTRACTOR SHALL VERIFY AND BE RESPONSIBLE FOR ALL DIMENSION AND CONDITIONS OF THE JOB. CONTRACTOR SHALL BE FAMILIAR WITH THE SITE AND CONDITIONS IT PRESENTS. THE ENGINEER MUST BE NOTIFIED OF ANY VARIATIONS FROM THE DIMENSIONS AND CONDITIONS SHOWN ON THIS DRAWING. SHOP DRAWINGS AND DETAILS MUST BE SUBMITTED TO THE ENGINEER FOR APPROVAL PRIOR TO PROCEEDING WITH FABRICATION. ALL COPY SHALL BE PROOFREAD BY THE ENGINEER AND LEGAL REQUIREMENTS CHECKED BY LEGAL DEPARTMENT.

NO.	REVISIONS / SUBMISSIONS	DATE
#	-	-
#	-	-
#	-	-
#	-	-

LAKE HAVASU CITY

ST3230 WAYFINDING AND SIGNAGE PROGRAM

SIGN PANEL LAYOUTS

Designed by:

Drawn by: GH & TT

Checked by: JA

Date: 11/2016

Dwg scale: N.T.S.

REGISTERED PROFESSIONAL ENGINEER (CIVIL) CERTIFICATE NO. 54390 JEREMY J. ABBOTT Date Signed 11-1-16 ARIZONA U.S.A.

EXPIRES 03-31-19

Sheet Number:

5

Sheet 5 of 69

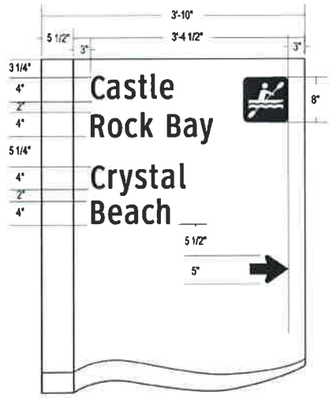

VDIR.2 **Sign# 100.B**

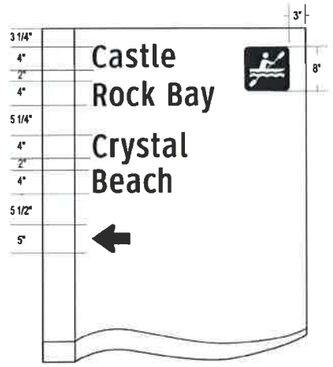

VDIR.2 **Sign# 100.C**

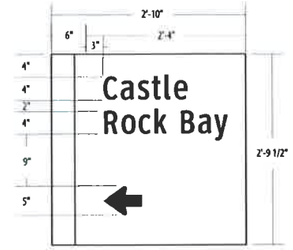

RESIDENT.1
Sign# 100.D

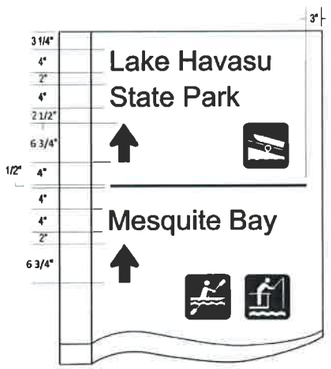

VDIR.2 **Sign# 108.A**

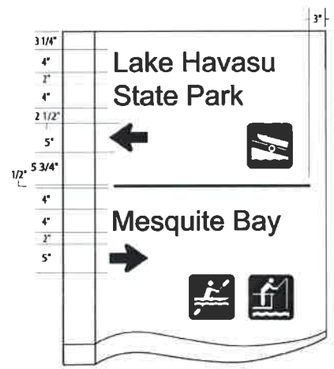

VDIR.2 **Sign# 109.A**

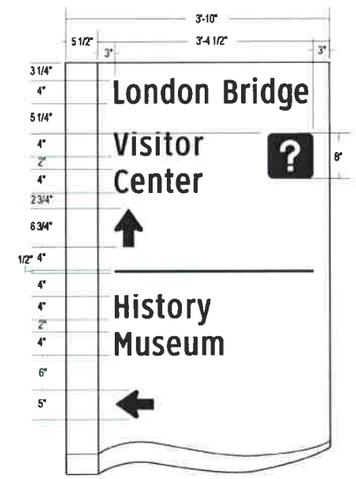

VDIR.3 **Sign# 120**

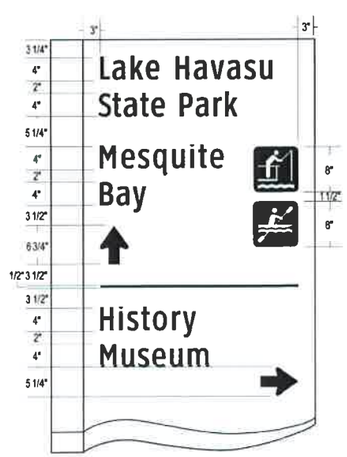

VDIR.3 **Sign# 121**

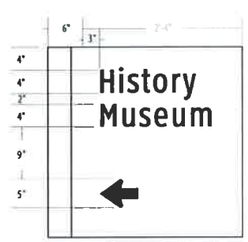

RESIDENT.1
Sign# 121.A

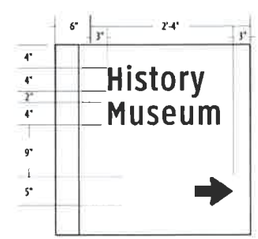

RESIDENT.1
Sign# 121.B

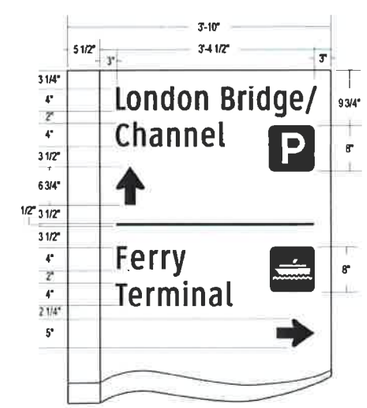

VDIR.2A
Sign# 124.A
Side A

VDIR.2A
Sign# 124.A
Side B

GENERAL NOTES:

1. MESSAGES SHOWN ARE ACTUAL MESSAGES. HIGHWAY GOTHIC SERIES B OR SERIES C.
2. PANEL LAYOUTS FOR ALL SIGN LOCATIONS SHALL BE INCLUDED IN SHOP DRAWING FOR REVIEW BY ENGINEER.
3. FABRICATOR SHALL VERIFY THE MOUNTING CONDITIONS AND PROVIDE A DETAIL DRAWING FOR EACH MOUNTING SITUATION, PRIOR TO FABRICATION. FABRICATOR SHALL OBTAIN APPROVAL FROM THE ENGINEER FOR PLACEMENT PRIOR TO FABRICATION.
4. WELDS: ALL WELD SHALL BE GROUND SMOOTH, PAINT ALL SEEMS.
5. HARDWARE: ALL FASTENERS SHALL BE CONCEALED. IF EXPOSED, HARDWARE SHALL BE TAMPER PROOF FASTENERS, CORROSION RESISTANT, AND COLOR MATCHING ADJACENT SURFACES.
6. ALL PAINTED SIGN SURFACES TO RECEIVE UV.ANTI-GRAFFITI SPRAY COATING. ALL SIGN SURFACES WITH REFLECTIVE GRAPHICS TO RECEIVE 3M APPROVED UV/ANTI-GRAFFITI OVERLAMINATE.
7. THESE DRAWINGS ARE MEANT FOR DESIGN INTENT ONLY AND ARE NOT FOR CONSTRUCTION. CONTRACTOR SHALL VERIFY AND BE RESPONSIBLE FOR ALL DIMENSION AND CONDITIONS OF THE JOB. CONTRACTOR SHALL BE FAMILIAR WITH THE SITE AND CONDITIONS IT PRESENTS. THE ENGINEER MUST BE NOTIFIED OF ANY VARIATIONS FROM THE DIMENSIONS AND CONDITIONS SHOWN ON THIS DRAWING. SHOP DRAWINGS AND DETAILS MUST BE SUBMITTED TO THE ENGINEER FOR APPROVAL PRIOR TO PROCEEDING WITH FABRICATION. ALL COPY SHALL BE PROOFREAD BY THE ENGINEER AND LEGAL REQUIREMENTS CHECKED BY LEGAL DEPARTMENT.

NO.	REVISIONS / SUBMISSIONS	DATE
#	-	-
#	-	-
#	-	-
#	-	-

LAKE HAVASU CITY

ST3230 WAYFINDING AND SIGNAGE PROGRAM

SIGN PANEL LAYOUTS VDIR.1

Designed by:

Drawn by: GH & TT

Checked by: JA

Date: 11/2016

Dwg scale: N.T.S.

REGISTERED PROFESSIONAL ENGINEER (CIVIL) CERTIFICATE NO. 34390 JEREMY J. ABBOTT Date Signed 11-1-16 ARIZONA U.S.A.

EXPIRES 03-31-19

Sheet Number:

6

Sheet 6 of 69

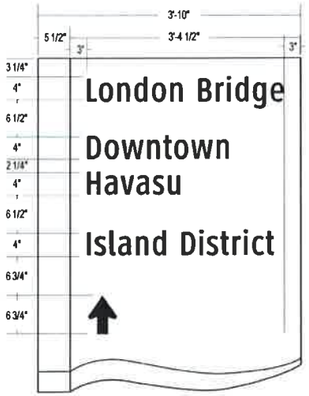

VDIR.2 **Sign# 125**

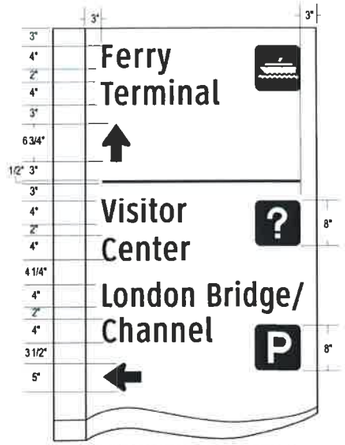

VDIR.3 **Sign# 125 A**

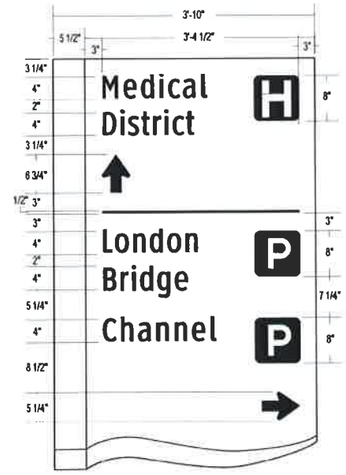

VDIR.3 **Sign# 125 B**

PARK.5A
Sign# 125.C *Side A*

PARK.5A
Sign# 125.C *Side B*

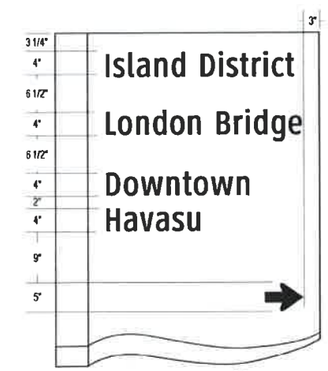

VDIR.2 **Sign# 127**

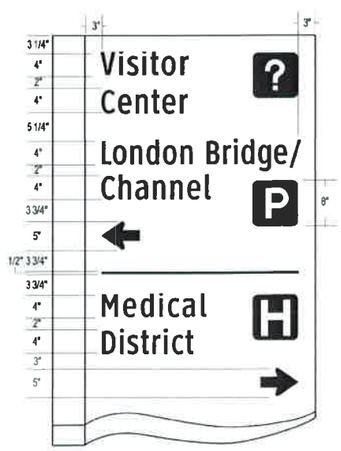

VDIR.3 **Sign# 127.A**

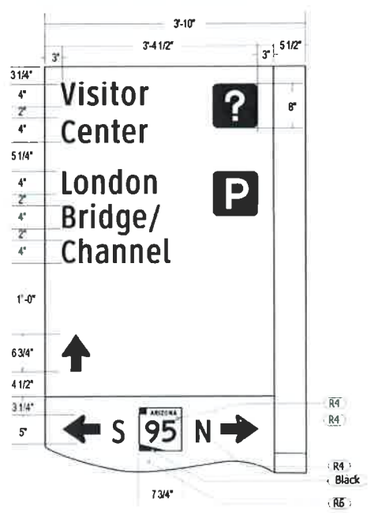

VDIR.3 Left **Sign# 127.B**

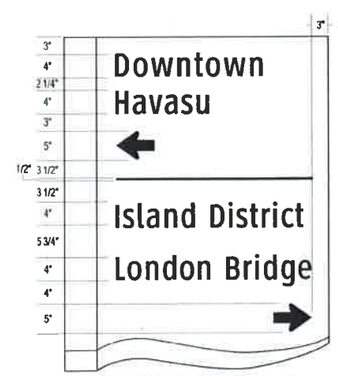

VDIR.2 **Sign# 128**

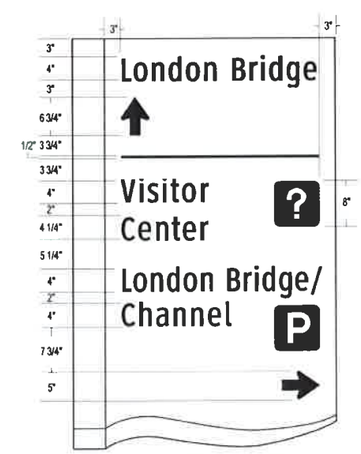

VDIR.3 **Sign# 128.A**

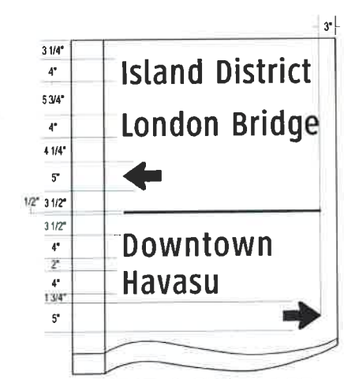

VDIR.2 **Sign# 129**

GENERAL NOTES:

1. MESSAGES SHOWN ARE ACTUAL MESSAGES. HIGHWAY GOTHIC SERIES B OR SERIES C.
2. PANEL LAYOUTS FOR ALL SIGN LOCATIONS SHALL BE INCLUDED IN SHOP DRAWING FOR REVIEW BY ENGINEER.
3. FABRICATOR SHALL VERIFY THE MOUNTING CONDITIONS AND PROVIDE A DETAIL DRAWING FOR EACH MOUNTING SITUATION, PRIOR TO FABRICATION. FABRICATOR SHALL OBTAIN APPROVAL FROM THE ENGINEER FOR PLACEMENT PRIOR TO FABRICATION.
4. WELDS: ALL WELD SHALL BE GROUND SMOOTH, PAINT ALL SEEMS.
5. HARDWARE: ALL FASTENERS SHALL BE CONCEALED. IF EXPOSED, HARDWARE SHALL BE TAMPER PROOF FASTENERS, CORROSION RESISTANT, AND COLOR MATCHING ADJACENT SURFACES.
6. ALL PAINTED SIGN SURFACES TO RECEIVE UV.ANTI-GRAFFITI SPRAY COATING. ALL SIGN SURFACES WITH REFLECTIVE GRAPHICS TO RECEIVE 3M APPROVED UV/ANTI-GRAFFITI OVERLAMINATE.
7. THESE DRAWINGS ARE MEANT FOR DESIGN INTENT ONLY AND ARE NOT FOR CONSTRUCTION. CONTRACTOR SHALL VERIFY AND BE RESPONSIBLE FOR ALL DIMENSION AND CONDITIONS OF THE JOB. CONTRACTOR SHALL BE FAMILIAR WITH THE SITE AND CONDITIONS IT PRESENTS. THE ENGINEER MUST BE NOTIFIED OF ANY VARIATIONS FROM THE DIMENSIONS AND CONDITIONS SHOWN ON THIS DRAWING. SHOP DRAWINGS AND DETAILS MUST BE SUBMITTED TO THE ENGINEER FOR APPROVAL PRIOR TO PROCEEDING WITH FABRICATION. ALL COPY SHALL BE PROOFREAD BY THE ENGINEER AND LEGAL REQUIREMENTS CHECKED BY LEGAL DEPARTMENT.

NO.	REVISIONS / SUBMISSIONS	DATE
#	-	-
#	-	-
#	-	-
#	-	-

LAKE HAVASU CITY

ST3230 WAYFINDING AND SIGNAGE PROGRAM

SIGN PANEL LAYOUTS RESIDENT.1

Designed by:
Drawn by: GH & TT
Checked by: JA
Date: 11/2016
Dwg scale: N.T.S.

REGISTERED PROFESSIONAL ENGINEER (CIVIL) CERTIFICATE NO. 54390 JEREMY J. ABBOTT Date Signed 11-1-16 ARIZONA U.S.A.

EXPIRES 03-31-19

Sheet Number:
7

Sheet 7 of 69

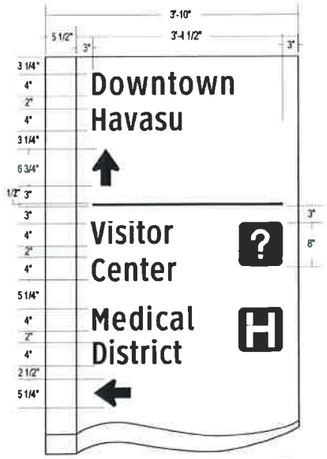

VDIR.3 **Sign# 129.A**

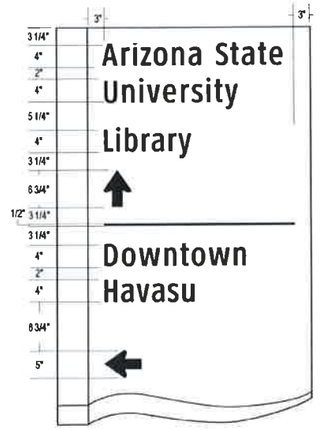

VDIR.3 **Sign# 130**

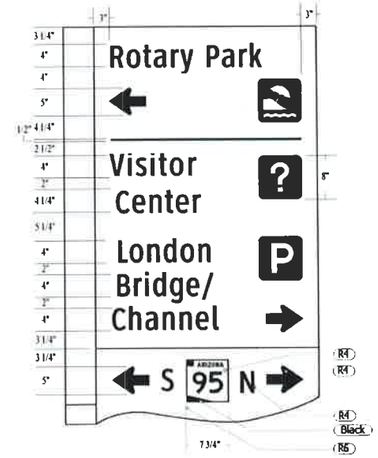

VDIR.3 **Sign# 131**

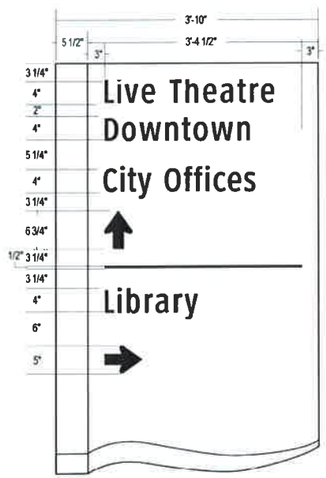

VDIR.3 **Sign# 133.A**

VDIR.2 **Sign# 134.A**

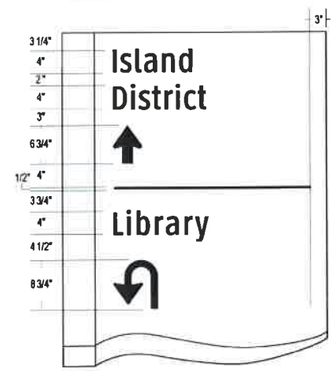

VDIR.2 **Sign 134.B**

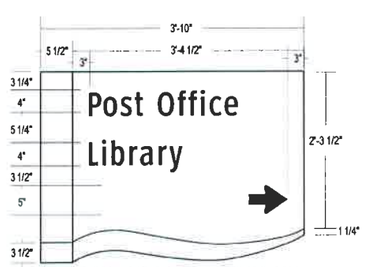

VDIR.1 **Sign# 134.C**

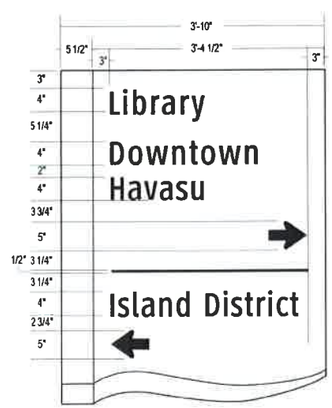

VDIR.2 **Sign# 134.D**

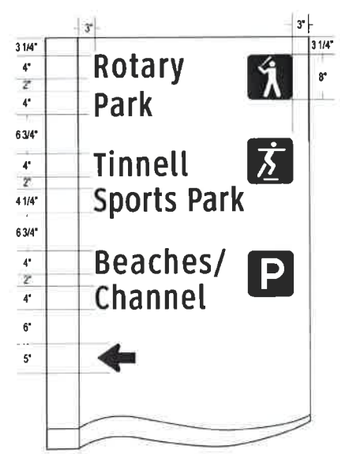

VDIR.3 **Sign# 137**

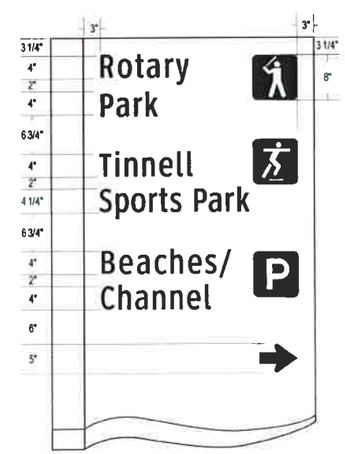

VDIR.3 **Sign# 137.A**

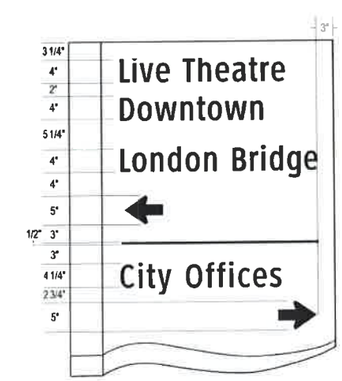

VDIR.2 **Sign# 150**

GENERAL NOTES:

1. MESSAGES SHOWN ARE ACTUAL MESSAGES. HIGHWAY GOTHIC SERIES B OR SERIES C.
2. PANEL LAYOUTS FOR ALL SIGN LOCATIONS SHALL BE INCLUDED IN SHOP DRAWING FOR REVIEW BY ENGINEER.
3. FABRICATOR SHALL VERIFY THE MOUNTING CONDITIONS AND PROVIDE A DETAIL DRAWING FOR EACH MOUNTING SITUATION, PRIOR TO FABRICATION. FABRICATOR SHALL OBTAIN APPROVAL FROM THE ENGINEER FOR PLACEMENT PRIOR TO FABRICATION.
4. WELDS: ALL WELD SHALL BE GROUND SMOOTH, PAINT ALL SEEMS.
5. HARDWARE: ALL FASTENERS SHALL BE CONCEALED. IF EXPOSED, HARDWARE SHALL BE TAMPER PROOF FASTENERS, CORROSION RESISTANT, AND COLOR MATCHING ADJACENT SURFACES.
6. ALL PAINTED SIGN SURFACES TO RECEIVE UV.ANTI-GRAFFITI SPRAY COATING. ALL SIGN SURFACES WITH REFLECTIVE GRAPHICS TO RECEIVE 3M APPROVED UV/ANTI-GRAFFITI OVERLAMINATE.
7. THESE DRAWINGS ARE MEANT FOR DESIGN INTENT ONLY AND ARE NOT FOR CONSTRUCTION. CONTRACTOR SHALL VERIFY AND BE RESPONSIBLE FOR ALL DIMENSION AND CONDITIONS OF THE JOB. CONTRACTOR SHALL BE FAMILIAR WITH THE SITE AND CONDITIONS IT PRESENTS. THE ENGINEER MUST BE NOTIFIED OF ANY VARIATIONS FROM THE DIMENSIONS AND CONDITIONS SHOWN ON THIS DRAWING. SHOP DRAWINGS AND DETAILS MUST BE SUBMITTED TO THE ENGINEER FOR APPROVAL PRIOR TO PROCEEDING WITH FABRICATION. ALL COPY SHALL BE PROOFREAD BY THE ENGINEER AND LEGAL REQUIREMENTS CHECKED BY LEGAL DEPARTMENT.

NO.	REVISIONS / SUBMISSIONS	DATE
#	-	-
#	-	-
#	-	-
#	-	-

LAKE HAVASU CITY

ST3230 WAYFINDING AND SIGNAGE PROGRAM

SIGN PANEL LAYOUTS VDIR.2

Designed by:

Drawn by: GH & TT

Checked by: JA

Date: 11/2016

Dwg scale: N.T.S.

REGISTERED PROFESSIONAL ENGINEER (CIVIL) CERTIFICATE NO. 34990 JEREMY J. ABBOTT Date Signed 11-4-16 ARIZONA U.S.A.

EXPIRES 03-31-19

Sheet Number:

8

Sheet 8 of 69

VDIR.1 **Sign# 151.A**

RESIDNET.1
Sign# 151.B

RESIDENT.1
Sign# 151.C

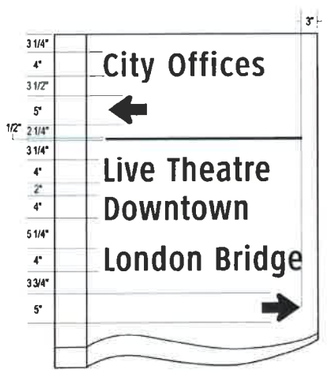

VDIR.2 **Sign# 152**

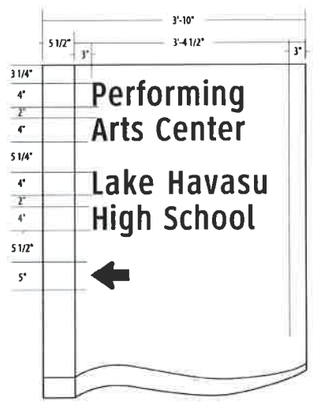

VDIR.2 **Sign# 156.B**

VDIR.2 **Sign# 156.C**

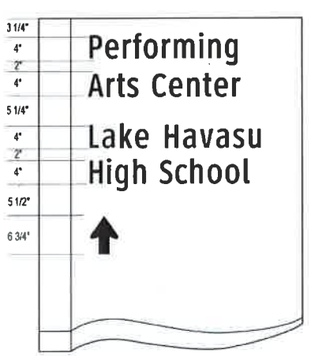

VDIR.2 **Sign# 156.D**

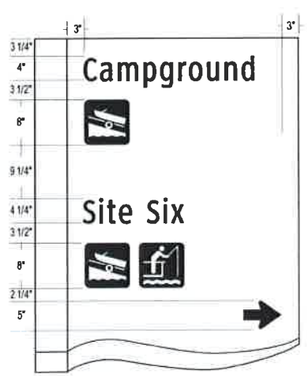

VDIR.2 **Sign# 161**

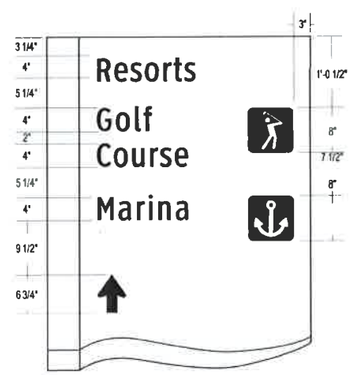

VDIR.2 **Sign# 161.A**

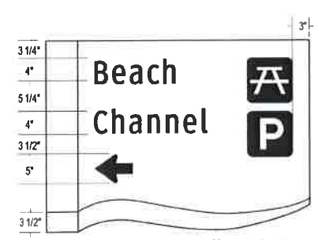

VDIR.1 **Sign# 161.B**

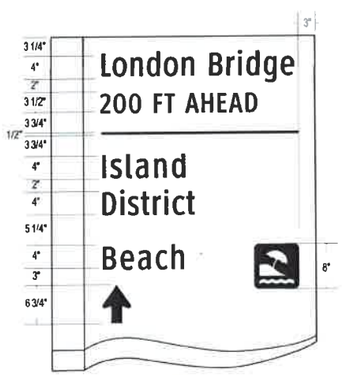

VDIR.2 **Sign# 161.D**

GENERAL NOTES:

1. MESSAGES SHOWN ARE ACTUAL MESSAGES. HIGHWAY GOTHIC SERIES B OR SERIES C.
2. PANEL LAYOUTS FOR ALL SIGN LOCATIONS SHALL BE INCLUDED IN SHOP DRAWING FOR REVIEW BY ENGINEER.
3. FABRICATOR SHALL VERIFY THE MOUNTING CONDITIONS AND PROVIDE A DETAIL DRAWING FOR EACH MOUNTING SITUATION, PRIOR TO FABRICATION. FABRICATOR SHALL OBTAIN APPROVAL FROM THE ENGINEER FOR PLACEMENT PRIOR TO FABRICATION.
4. WELDS: ALL WELD SHALL BE GROUND SMOOTH, PAINT ALL SEEMS.
5. HARDWARE: ALL FASTENERS SHALL BE CONCEALED. IF EXPOSED, HARDWARE SHALL BE TAMPER PROOF FASTENERS, CORROSION RESISTANT, AND COLOR MATCHING ADJACENT SURFACES.
6. ALL PAINTED SIGN SURFACES TO RECEIVE UV.ANTI-GRAFFITI SPRAY COATING. ALL SIGN SURFACES WITH REFLECTIVE GRAPHICS TO RECEIVE 3M APPROVED UV/ANTI-GRAFFITI OVERLAMINATE.
7. THESE DRAWINGS ARE MEANT FOR DESIGN INTENT ONLY AND ARE NOT FOR CONSTRUCTION. CONTRACTOR SHALL VERIFY AND BE RESPONSIBLE FOR ALL DIMENSION AND CONDITIONS OF THE JOB. CONTRACTOR SHALL BE FAMILIAR WITH THE SITE AND CONDITIONS IT PRESENTS. THE ENGINEER MUST BE NOTIFIED OF ANY VARIATIONS FROM THE DIMENSIONS AND CONDITIONS SHOWN ON THIS DRAWING. SHOP DRAWINGS AND DETAILS MUST BE SUBMITTED TO THE ENGINEER FOR APPROVAL PRIOR TO PROCEEDING WITH FABRICATION. ALL COPY SHALL BE PROOFREAD BY THE ENGINEER AND LEGAL REQUIREMENTS CHECKED BY LEGAL DEPARTMENT.

NO.	REVISIONS / SUBMISSIONS	DATE
#	-	-
#	-	-
#	-	-
#	-	-

LAKE HAVASU CITY

ST3230 WAYFINDING AND SIGNAGE PROGRAM

SIGN PANEL LAYOUTS VDIR.2

Designed by:

Drawn by: GH & TT

Checked by: JA

Date: 11/2016

Dwg scale: N.T.S.

REGISTERED PROFESSIONAL ENGINEER (CIVIL)
CERTIFICATE NO. 54390
JEREMY J. ABBOTT
Date Signed 11-7-16
ARIZONA U.S.A.

EXPIRES 03-31-19

Sheet Number:

9

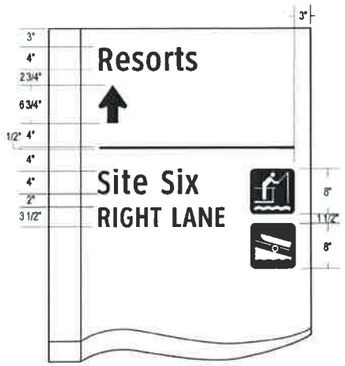

VDIR.2 **Sign# 162**

VDIR.1 **Sign# 162.A**

VDIR.1 **Sign# 162.B**

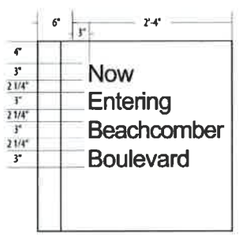

RESIDENT.1
Sign# 163

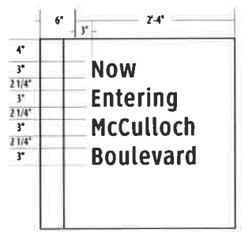

RESIDENT.1
SIGN# 163.C

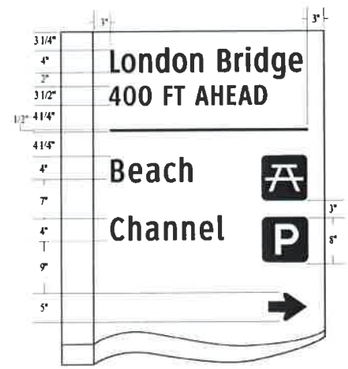

VDIR.2 **Sign# 164**

VDIR.1 **Sign# 165.A**

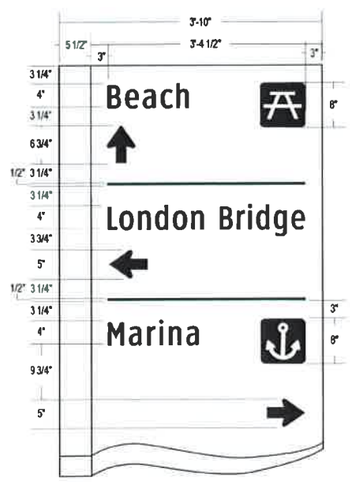

VDIR.3 **Sign# 167**

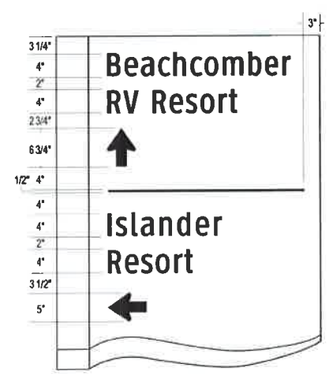

VDIR.2 **Sign# 168**

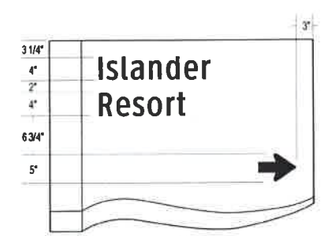

VDIR.1 **Sign# 168.A**

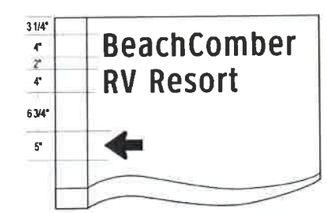

VDIR.1 **Sign# 169**

GENERAL NOTES:

1. MESSAGES SHOWN ARE ACTUAL MESSAGES. HIGHWAY GOTHIC SERIES B OR SERIES C.
2. PANEL LAYOUTS FOR ALL SIGN LOCATIONS SHALL BE INCLUDED IN SHOP DRAWING FOR REVIEW BY ENGINEER.
3. FABRICATOR SHALL VERIFY THE MOUNTING CONDITIONS AND PROVIDE A DETAIL DRAWING FOR EACH MOUNTING SITUATION, PRIOR TO FABRICATION. FABRICATOR SHALL OBTAIN APPROVAL FROM THE ENGINEER FOR PLACEMENT PRIOR TO FABRICATION.
4. WELDS: ALL WELD SHALL BE GROUND SMOOTH, PAINT ALL SEEMS.
5. HARDWARE: ALL FASTENERS SHALL BE CONCEALED. IF EXPOSED, HARDWARE SHALL BE TAMPER PROOF FASTENERS, CORROSION RESISTANT, AND COLOR MATCHING ADJACENT SURFACES.
6. ALL PAINTED SIGN SURFACES TO RECEIVE UV.ANTI-GRAFFITI SPRAY COATING. ALL SIGN SURFACES WITH REFLECTIVE GRAPHICS TO RECEIVE 3M APPROVED UV/ANTI-GRAFFITI OVERLAMINATE.
7. THESE DRAWINGS ARE MEANT FOR DESIGN INTENT ONLY AND ARE NOT FOR CONSTRUCTION. CONTRACTOR SHALL VERIFY AND BE RESPONSIBLE FOR ALL DIMENSION AND CONDITIONS OF THE JOB. CONTRACTOR SHALL BE FAMILIAR WITH THE SITE AND CONDITIONS IT PRESENTS. THE ENGINEER MUST BE NOTIFIED OF ANY VARIATIONS FROM THE DIMENSIONS AND CONDITIONS SHOWN ON THIS DRAWING. SHOP DRAWINGS AND DETAILS MUST BE SUBMITTED TO THE ENGINEER FOR APPROVAL PRIOR TO PROCEEDING WITH FABRICATION. ALL COPY SHALL BE PROOFREAD BY THE ENGINEER AND LEGAL REQUIREMENTS CHECKED BY LEGAL DEPARTMENT.

NO.	REVISIONS / SUBMISSIONS	DATE
#	-	-
#	-	-
#	-	-
#	-	-

LAKE HAVASU CITY

ST3230 WAYFINDING AND SIGNAGE PROGRAM

SIGN PANEL LAYOUTS VDIR.2 & VDIR.3

Designed by:

Drawn by: GH & TT

Checked by: JA

Date: 11/2016

Dwg scale: N.T.S.

REGISTERED PROFESSIONAL ENGINEER (CIVIL) CERTIFICATE NO. 34390 JEREMY J. ABBOTT Date Signed 11-1-16 ARIZONA U.S.A.

EXPIRES 03-31-19

Sheet Number:

10

Sheet 10 of 69

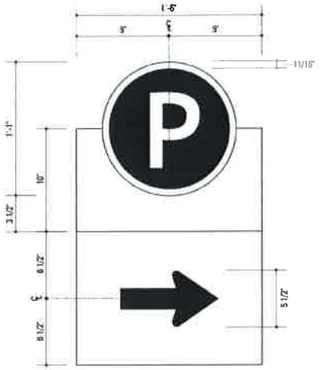

PARK.1A
Sign# 301

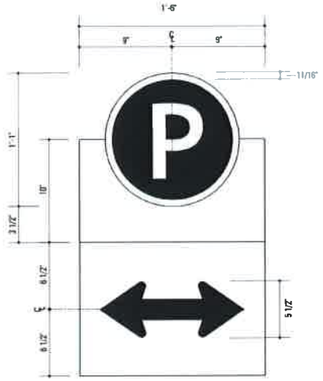

PARK.1A
Sign# 302

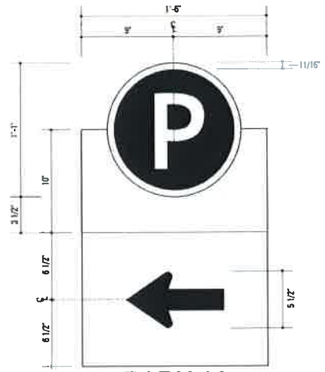

PARK.1A
Sign# 303

PARK.2 **Sign# 310**

PARK.2A **Sign# 311**

PARK.5A
Sign# 312 *Side A*

PARK.5A
Sign# 312 *Side B*

PARK.6
Sign# 313 *Side A*

(TYP.)

PARK.6
Sign# 313 *Side B*

PARK.2 **Sign# 315**

GENERAL NOTES:

1. MESSAGES SHOWN ARE ACTUAL MESSAGES. HIGHWAY GOTHIC SERIES B.
2. SIGN LOCATION ARE APPROXIMATE AND FINAL LOCATION SHALL BE APPROVED BY THE ENGINEER.
3. PANEL LAYOUTS FOR ALL SIGN LOCATIONS SHALL BE INCLUDED IN SHOP DRAWING FOR REVIEW BY ENGINEER.
4. FABRICATOR SHALL VERIFY THE MOUNTING CONDITIONS AND PROVIDE A DETAIL DRAWING FOR EACH MOUNTING SITUATION, PRIOR TO FABRICATION. FABRICATOR SHALL OBTAIN APPROVAL FROM THE ENGINEER FOR PLACEMENT PRIOR TO FABRICATION.
5. WELDS: ALL WELD SHALL BE GROUND SMOOTH, PAINT ALL SEEMS.
6. HARDWARE: ALL FASTENERS SHALL BE CONCEALED. IF EXPOSED, HARDWARE SHALL BE TAMPER PROOF FASTENERS, CORROSION RESISTANT, AND COLOR MATCHING ADJACENT SURFACES.
7. ALL PAINTED SIGN SURFACES TO RECEIVE UV.ANTI-GRADFFITI SPRAY COATING. ALL SIGN SURFACES WITH REFLECTIVE GRAPHICS TO RECEIVE 3M APPROVED UV/ANTI-GRAFFITI OVERLAMINATE.
8. THESE DRAWINGS ARE MEANT FOR DESIGN INTENT ONLY AND ARE NOT FOR CONSTRUCTION. CONTRACTOR SHALL VERIFY AND BE RESPONSIBLE FOR ALL DIMENSION AND CONDITIONS OF THE JOB. CONTRACTOR SHALL BE FAMILIAR WITH THE SITE AND CONDITIONS IT PRESENTS. THE ENGINEER MUST BE NOTIFIED OF ANY VARIATIONS FROM THE DIMENSIONS AND CONDITIONS SHOWN ON THIS DRAWING. SHOP DRAWINGS AND DETAILS MUST BE SUBMITTED TO THE ENGINEER FOR APPROVAL PRIOR TO PROCEEDING WITH FABRICATION. ALL COPY SHALL BE PROOFREAD BY THE ENGINEER AND LEGAL REQUIREMENTS CHECKED BY LEGAL DEPARTMENT.

NO.	REVISIONS / SUBMISSIONS	DATE
#	-	-
#	-	-
#	-	-
#	-	-

LAKE HAVASU CITY

ST3230 WAYFINDING AND SIGNAGE PROGRAM

SIGN PANEL LAYOUTS VDIR.3

Designed by:

Drawn by: GH & TT

Checked by: JA

Date: 11/2016

Dwg scale: N.T.S.

REGISTERED PROFESSIONAL ENGINEER (CIVIL)
CERTIFICATE NO. 54390
JEREMY J. ABBOTT
Date Signed 11-7-16
ARIZONA U.S.A.

EXPIRES 03-31-19

Sheet Number:

11

Sheet 11 of 69

PARK.5A
Sign# 321 *Side A*

PARK.5A
Sign# 321 *Side B*

PARK.5A
Sign# 326 *Side A*

PARK.5A
Sign# 326 *Side B*

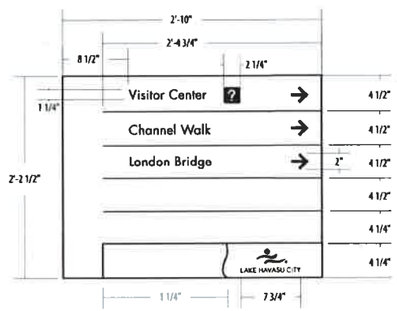

PDIR.1
Sign# 411- *Side A*

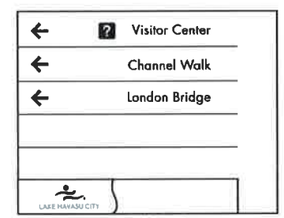

PDIR.1
Sign# 411- *Side B*

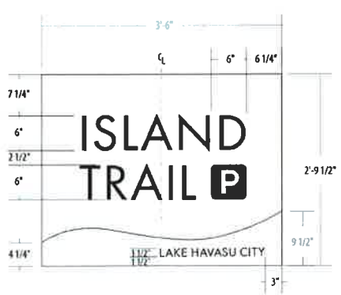

DEST.1 **Sign# 800**

DEST.1 **Sign# 801**

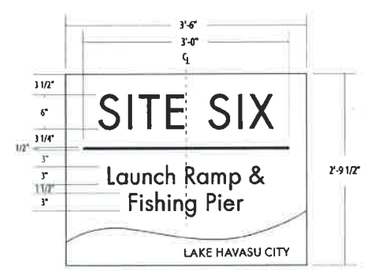

DEST.1 **Sign# 802**

DEST.1 **Sign# 804**

GENERAL NOTES:

1. MESSAGES SHOWN ARE ACTUAL MESSAGES. HIGHWAY GOTHIC SERIES B OR SERIES C.
2. PANEL LAYOUTS FOR ALL SIGN LOCATIONS SHALL BE INCLUDED IN SHOP DRAWING FOR REVIEW BY ENGINEER.
3. FABRICATOR SHALL VERIFY THE MOUNTING CONDITIONS AND PROVIDE A DETAIL DRAWING FOR EACH MOUNTING SITUATION, PRIOR TO FABRICATION. FABRICATOR SHALL OBTAIN APPROVAL FROM THE ENGINEER FOR PLACEMENT PRIOR TO FABRICATION.
4. WELDS: ALL WELD SHALL BE GROUND SMOOTH, PAINT ALL SEEMS.
5. HARDWARE: ALL FASTENERS SHALL BE CONCEALED. IF EXPOSED, HARDWARE SHALL BE TAMPER PROOF FASTENERS, CORROSION RESISTANT, AND COLOR MATCHING ADJACENT SURFACES.
6. ALL PAINTED SIGN SURFACES TO RECEIVE UV.ANTI-GRAFFITI SPRAY COATING. ALL SIGN SURFACES WITH REFLECTIVE GRAPHICS TO RECEIVE 3M APPROVED UV/ANTI-GRAFFITI OVERLAMINATE.
7. THESE DRAWINGS ARE MEANT FOR DESIGN INTENT ONLY AND ARE NOT FOR CONSTRUCTION. CONTRACTOR SHALL VERIFY AND BE RESPONSIBLE FOR ALL DIMENSION AND CONDITIONS OF THE JOB. CONTRACTOR SHALL BE FAMILIAR WITH THE SITE AND CONDITIONS IT PRESENTS. THE ENGINEER MUST BE NOTIFIED OF ANY VARIATIONS FROM THE DIMENSIONS AND CONDITIONS SHOWN ON THIS DRAWING. SHOP DRAWINGS AND DETAILS MUST BE SUBMITTED TO THE ENGINEER FOR APPROVAL PRIOR TO PROCEEDING WITH FABRICATION. ALL COPY SHALL BE PROOFREAD BY THE ENGINEER AND LEGAL REQUIREMENTS CHECKED BY LEGAL DEPARTMENT.

NO.	REVISIONS / SUBMISSIONS	DATE
#	-	-
#	-	-
#	-	-
#	-	-

LAKE HAVASU CITY

ST3230 WAYFINDING AND SIGNAGE PROGRAM

SIGN PANEL LAYOUTS VDIR.3

Designed by:

Drawn by: GH & TT

Checked by: JA

Date: 11/2016

Dwg scale: N.T.S.

REGISTERED PROFESSIONAL ENGINEER (CIVIL)
CERTIFICATE NO. 54390
JEREMY J. ABBOTT
Date Signed 11-1-16
ARIZONA U.S.A.

EXPIRES 03-31-19

Sheet Number:

12

SIGN LOCATION 201 & 202

REFURFISH EXISTING GATEWAYS

- Painted Aluminum panels wrap existing structure, wave shape picks up on wayfinding system.
- Logo is lazer cut out of steel panel and backed with painted substrate.
- Corner "sun" is a painted aluminum box construction attached to the existing structure
- Corten Panel is mounted behind the bridge structure and serves as a backdrop for the dimensional letters "THE LONDON BRIDGE", which are mounted to the top of the existing bridge structure of the sign.
- The words "Home of the " are on the corten panel - eitched and filled with white.
- Sign is lit with ground spot lights.

SECONDARY TYPEFACE (Non-Vehicular Directional)

Futura Standard Book

ABCDEFGHIJKLMNOPQRSTUVWXYZ

abcdefghijklmnopqrstuvwxyz

1234567890 ‘’!@#$%^

Amongst the several mechanical Arts that have engaged my attention, there is no one which I have pursued with so much steadiness and pleasure, as that of Letter Founding.

Library	Library	Library
acceptable	**NOT acceptable**	**NOT acceptable**
123A	123A	123A
acceptable	**NOT acceptable**	**NOT acceptable**

SPECIFICATIONS

The Futura typeface is utilized for messages on gateway, destination and parking signs.

All type shall be set exactly as specified. Substitutions will only be accepted, at the **DESIGNER'S** discretion, where they match the specified typeface in every detail. The **FABRICATOR** shall be aware that different versions of typesetting equipment may not satisfactorily match specified type faces and in such instances will not be acceptable.

Sometimes the Foot mark is mistaken for an apostrophe and an inch mark is mistaken for quotations. Below are examples of correct and incorrect apostrophe’s for each typeface.

FUTURA STANDARD BOOK

’ This apostrophe is CORRECT.

PARK’S

This apostrophe is INCORRECT.

PARK'S

DESIGN NOTE:
Final design and shop drawings shall be supplied by the fabricator. An Arizona registered engineer is required to sign and seal the submittal of shop drawings.

NOTES

ENVIRONMENTS & EXPERIENCES

merje

120 North Church Street
Suite 208
West Chester, PA 19380
T 484.266.0648
www.merjedesign.com

CLIENT / PROJECT

Lake Havasu City, AZ Wayfinding Program

PROJECT NO.

SUBCONSULTANT

SHEET TITLE

Typography Specifications

DATE January 8, 2015

DRAWN BY: JC/PR

REVISIONS

February 10, 2015

These drawings are meant for DESIGN INTENT ONLY and are not for construction. Contractor shall verify and be responsible for all dimensions and conditions of the job. Contractor shall be familiar with the site and conditions it presents. This office must be notified of any variations from the dimensions and conditions shown on this drawing. Shop drawings and details must be submitted to this office for approval prior to proceeding with fabrication. All copy shall be proofread by client and legal requirements checked by legal department.

SHEET NO.

A.2

LETTER SPACING

Inconsistencies in Letter Spacing

TYPEFACE 1

Community

Corrected Letter Spacing

TYPEFACE 1

Community

IMPORTANT: Individual spacing of each letter needs to be evaluated. See Examples Above.
Kern all Copy so that **each character is optically centered** between the center of each of the surrounding characters.

ARROWS AND TEXT RELATIONSHIPS

Always measure from baselline to baseline.
Please Reference to the arrow detail below.

COPY HEIGHT

When measuring copy height, measure only the height of the Capital letters to determine your overall copy height shown in illustration below as "X." Some of the other letters have an extended height beyond the average height of the letters.

LINE SPACING

When measuring line spacing, always measure from the baseline of the top most text line to the baseline of the text line below shown as "X."

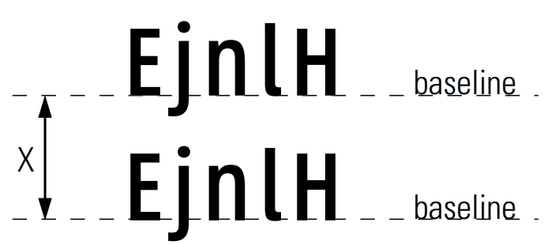

SPECIFICATIONS

ALL TYPE SHALL BE SET EXACTLY AS SPECIFIED.

Individual spacing of each letter shall be evaluated and approved by the **DESIGNER** and **CLIENT** prior to sign fabrication (in the shop drawing phase). All copy shall be kerned so that each character is optically centered between the center of each of the surrounding characters.

DESIGN NOTE:
Final design and shop drawings shall be supplied by the fabricator. An Arizona registered engineer is required to sign and seal the submittal of shop drawings.

NOTES

ENVIRONMENTS & EXPERIENCES

merje

120 North Church Street
Suite 208
West Chester, PA 19380
T 484.266.0648
www.merjedesign.com

CLIENT / PROJECT

Lake Havasu City, AZ
Wayfinding Program

PROJECT NO.

SUBCONSULTANT

SHEET TITLE

Typography Specifications

DATE January 8, 2015

DRAWN BY: JC/PR

REVISIONS

February 10, 2015

August 2016

These drawings are meant for DESIGN INTENT ONLY and are not for construction. Contractor shall verify and be responsible for all dimensions and conditions of the job. Contractor shall be familiar with the site and conditions it presents. This office must be notified of any variations from the dimensions and conditions shown on this drawing. Shop drawings and details must be submitted to this office for approval prior to proceeding with fabrication. All copy shall be proofread by client and legal requirements checked by legal department.

SHEET NO.

A.3

GRAPHICS

LAKE HAVASU CITY

Logo - for Vehicular Signage

LAKE HAVASU CITY

Logo - for Pedestrian Signage

Parking Graphic

LAKE HAVASU CITY

LAKE HAVASU CITY

Text alone

ARROWS

Vehicular Arrows

Left Arrow

Upwards Left Arrow

Up Arrow

Upwards Right Arrow

Right Arrow

Straight then Left Arrow

Left/Right Arrow

Straight then Right Arrow

SPECIFICATIONS

All artwork illustrated on this page will be provided by designer as electronic vector art (Adobe Illustrator EPS file).

The Contractor shall utilize all artwork provided exactly as specified. Do NOT substitute with any other artwork!

NOTE: Symbols and wordmarks shown in this document are NOT camera ready artwork, and should NOT be created as a substitute for the actual vector art.

DESIGN NOTE:
Final design and shop drawings shall be supplied by the fabricator. An Arizona registered engineer is required to sign and seal the submittal of shop drawings.

NOTES

ENVIRONMENTS & EXPERIENCES

merje

120 North Church Street
Suite 208
West Chester, PA 19380
T 484.266.0648
www.merjedesign.com

CLIENT / PROJECT

Lake Havasu City, AZ Wayfinding Program

PROJECT NO.

SUBCONSULTANT

SHEET TITLE

Project Artwork and Arrows

DATE January 8, 2015

DRAWN BY: JC/PR

REVISIONS

February 10, 2015

August 2016

These drawings are meant for DESIGN INTENT ONLY and are not for construction. Contractor shall verify and be responsible for all dimensions and conditions of the job. Contractor shall be familiar with the site and conditions it presents. This office must be notified of any variations from the dimensions and conditions shown on this drawing. Shop drawings and details must be submitted to this office for approval prior to proceeding with fabrication. All copy shall be proofread by client and legal requirements checked by legal department.

SHEET NO.

A.4

RECREATION PICTOGRAMS - FOR ADOT SIGNS ON ARIZONA ROUTE 95

Arizona Manual of Approved Signs - JULY 2013

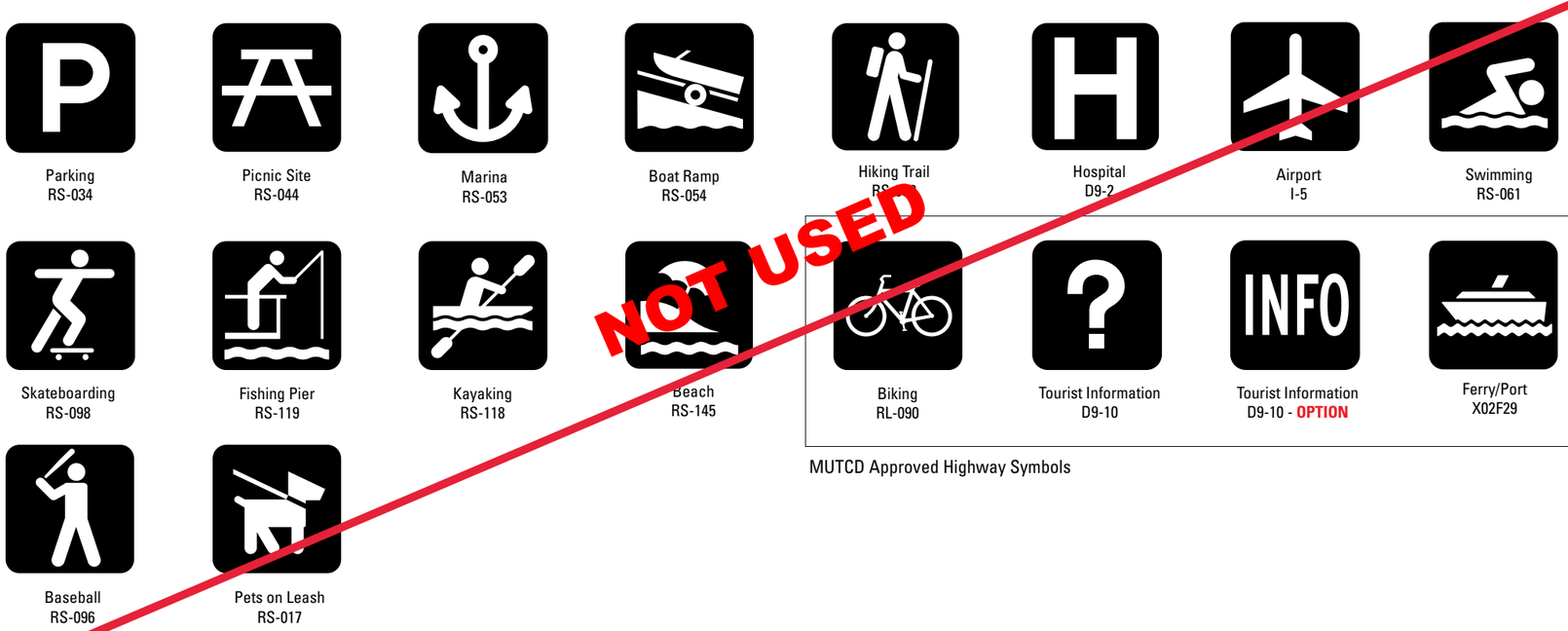

NOT USED

MUTCD Approved Highway Symbols

RECREATION PICTOGRAMS - FOR LAKE HAVASU CITY SIGNS

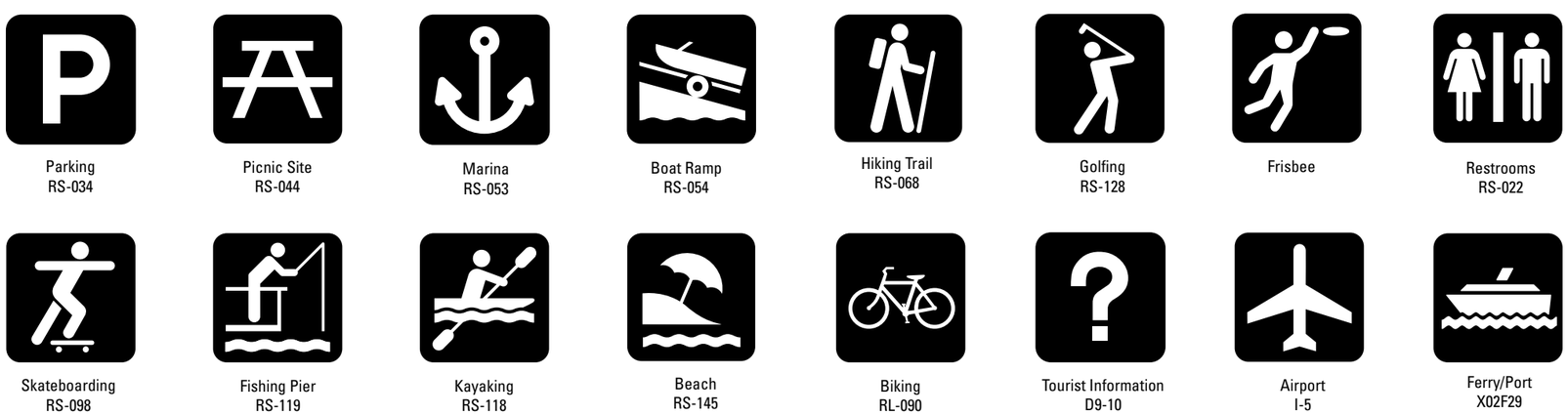

SPECIFICATIONS

All artwork illustrated on this page will be provided by designer as electronic vector art (Adobe Illustrator EPS file).

The Contractor shall utilize all artwork provided exactly as specified. Do NOT substitute with any other artwork!

NOTE: Symbols and wordmarks shown in this document are NOT camera ready artwork, and should NOT be created as a substitute for the actual vector art.

DESIGN NOTE:
Final design and shop drawings shall be supplied by the fabricator. An Arizona registered engineer is required to sign and seal the submittal of shop drawings.

NOTES

ENVIRONMENTS & EXPERIENCES

merje

120 North Church Street
Suite 208
West Chester, PA 19380
T 484.266.0648
www.merjedesign.com

CLIENT / PROJECT

Lake Havasu City, AZ Wayfinding Program

PROJECT NO.

SUBCONSULTANT

DATE January 8, 2015

DRAWN BY: JC/PR

REVISIONS

February 10, 2015

August 2016

SHEET TITLE

DOT Recreation Pictograms

SHEET NO.

A.5

These drawings are meant for DESIGN INTENT ONLY and are not for construction. Contractor shall verify and be responsible for all dimensions and conditions of the job. Contractor shall be familiar with the site and conditions it presents. This office must be notified of any variations from the dimensions and conditions shown on this drawing. Shop drawings and details must be submitted to this office for approval prior to proceeding with fabrication. All copy shall be proofread by client and legal requirements checked by legal department.

SPECIFICATIONS

PAINT & REFLECTIVE VINYL COLOR CHART

The FABRICATOR must submit 2 identical sets of each color specified for approval prior to any painting. Sample swatches are to be produced on the substrate material of the final product.

The colors must look exactly the same every time they are used so that people associate them with the Lake Havasu City sign program. All media, vinyl, paint, and inks must be produced so that the colors match as specified on this page.

PAINT	NAME	SPECIFICATION	PROCESS
P1	Hardees New Blue	Matthews Paint # MP04036 (PMS 294 C)	Surface applied, exterior sign paint and protective top coat: MATTHEWS Acrylic Polyurethane with Clear Coat Satin finish.
P2	Paddington Blue	Matthews Paint # MP0732 (PMS 285 C)	Surface applied, exterior sign paint and protective top coat: MATTHEWS Acrylic Polyurethane with Clear Coat Satin finish.
P3	Golden Orchards	Matthews Paint # MP07676 (PMS 122 C)	Surface applied, exterior sign paint and protective top coat: MATTHEWS Acrylic Polyurethane with Clear Coat Satin finish.
P4	Southern Clay	Matthews Paint # MP00192 (PMS 718 C)	Surface applied, exterior sign paint and protective top coat: MATTHEWS Acrylic Polyurethane with Clear Coat Satin finish.
P5	Light Blue	To match PMS 2975 C	Surface applied, exterior sign paint and protective top coat: MATTHEWS Acrylic Polyurethane with Clear Coat Satin finish.
P6	Trendy Grey Metallic	Matthews Paint # MP30896	Surface applied, exterior sign paint and protective top coat: MATTHEWS Acrylic Polyurethane with Clear Coat Satin finish.
P7	Verizon White	Matthews Paint # MP27386	Surface applied, exterior sign paint and protective top coat: MATTHEWS Acrylic Polyurethane with Clear Coat Satin finish.
P8	Rodin Patina Metallic	Matthews Paint # MP19962	Surface applied, exterior sign paint and protective top coat: MATTHEWS Acrylic Polyurethane with Clear Coat Satin finish.
P9	Black Stallion	Matthews Paint # MP33653	Surface applied, exterior sign paint and protective top coat: MATTHEWS Acrylic Polyurethane with Clear Coat Satin finish.
P10	Galvanized Aluminum	Galvanized Aluminum	The process of coating aluminium with a layer of zinc by immersing the metal in a bath of molten zinc at a temperature of around 860 °F (460 °C).

REFLECTIVE VINYL	NAME	SPECIFICATION	PROCESS
R1	Hardees New Blue (Reflective)	3M High Intensity Prismatic Reflective Sheeting 3930 To match PMS 294 C	Background and Characters 3M custom inks direct to 3930 with 3M approved Clear UV/Graffiti overlaminate. *Applied according to Manufacturers Spec to aluminum sheet.
R2	Paddington Blue (Reflective)	3M High Intensity Prismatic Reflective Sheeting 3930 To match PMS 285 C	Background and Characters 3M custom inks direct to 3930 with 3M approved Clear UV/Graffiti overlaminate. *Applied according to Manufacturers Spec to aluminum sheet.
R3	Golden Orchard (Reflective)	3M High Intensity Prismatic Reflective Sheeting 3930 To match PMS 122 C	Background and Characters 3M custom inks direct to 3930 with 3M approved Clear UV/Graffiti overlaminate. *Applied according to Manufacturers Spec to aluminum sheet.
R4	White (Reflective)	3M High Intensity Prismatic Reflective Sheeting 3930 To match WHITE	KNOCK-OUT WHITE: Background and Characters 3M custom inks direct to 3930 with 3M approved Clear UV/Graffiti overlaminate. *Applied according to Manufacturers Spec to aluminum sheet.
R5	Southern Clay (Reflective)	3M High Intensity Prismatic Reflective Sheeting 3930 To match PMS 718 C	Background and Characters 3M custom inks direct to 3930 with 3M approved Clear UV/Graffiti overlaminate. *Applied according to Manufacturers Spec to aluminum sheet.
R6	MUTCD Green (Reflective)	3M High Intensity Prismatic Reflective Sheeting 3930 To match PMS 342 C	Background and Characters 3M custom inks direct to 3930 with 3M approved Clear UV/Graffiti overlaminate. *Applied according to Manufacturers Spec to aluminum sheet.
R7	MUTCD Red (Reflective)	3M High Intensity Prismatic Reflective Sheeting 3930 To match PMS 187 C	Background and Characters 3M custom inks direct to 3930 with 3M approved Clear UV/Graffiti overlaminate. *Applied according to Manufacturers Spec to aluminum sheet.

* MUST comply with MUTCD section Table 2A-3 – Minimum maintained retroreflectivity levels. Approved process: Durst RHO 161 TS printer. Sherine Industries: (604) 513-1887, or equal.
NOTE: All 3M products are to be processed and applied according to 3M specifications. The seaming of material is NOT preferred. If the height of a sign panel is greater then 48 inches, the 3M 3930 material should be oriented vertically with stripes at 0 degrees, to avoid the seaming of material. If seaming is required, it should occur at the rule line or between messages.

DESIGN NOTE:
Final design and shop drawings shall be supplied by the fabricator. An Arizona registered engineer is required to sign and seal the submittal of shop drawings.

NOTES

ENVIRONMENTS & EXPERIENCES
merje
120 North Church Street
Suite 208
West Chester, PA 19380
T 484.266.0648
www.merjedesign.com

CLIENT / PROJECT
Lake Havasu City, AZ Wayfinding Program

PROJECT NO.

SUBCONSULTANT

DATE January 8, 2015

DRAWN BY: JC/PR

REVISIONS
February 10, 2015
August 2016

SHEET TITLE
Paint & Reflective Vinyl Color Chart

SHEET NO.
A.6

These drawings are meant for DESIGN INTENT ONLY and are not for construction. Contractor shall verify and be responsible for all dimensions and conditions of the job. Contractor shall be familiar with the site and conditions it presents. This office must be notified of any variations from the dimensions and conditions shown on this drawing. Shop drawings and details must be submitted to this office for approval prior to proceeding with fabrication. All copy shall be proofread by client and legal requirements checked by legal department.

VINYL	NAME	SPECIFICATION	PROCESS
V1	Silver	3M Scotchcal ElectroCut Translucent Graphic Film 3M 3630-121 / To match PMS 877	Surface applied according to 3M manufacturers specifications. 3M Scotchcal ElectroCut Graphic Film to be applied direct to 3930 with 3M approved Clear UV/Graffiti overlaminate. Applied according to Manufacturers Spec to aluminum sheet.
V2	Matte White	3M Scotchcal ElectroCut Opaque Graphic Film 7725-20 Matte White	Surface applied according to 3M manufacturers specifications.

MATERIALS	NAME	SPECIFICATION	PROCESS
M1	Corten Steel	Corten steel, ASTM A-242 or A-606	Weathering steel forms a stable rust-like appearance exposed to the natural weather and elements.
M2	Wire Mesh	McNichols® Shire 8314 SS Type 304 wire mesh	Wire mesh for sign types DIST.1 & DIST.2
M3	Concrete Cap	Formed concrete caps, with beveled top edges	For sign type DIST.1, and to be mechanically fastened.
M4	Gabian Basket	Custom Gabian basket, filled with local river rock	Rugged high tensile wire mesh coated with corrosion-resistant layer of zinc. Filled with local river rock, and secure lid with spiral binders, lacing wire or utilizing "C" rings.

SPECIFICATIONS

MATERIAL & VINYL COLOR CHART

The FABRICATOR must submit 2 identical sets of each color specified for approval prior to any painting. Sample swatches are to be produced on the substrate material of the final product.

The colors must look exactly the same every time they are used so that people associate them with the Lake Havasu City sign program. All media, vinyl, paint, and inks must be produced so that the colors match as specified on this page.

DESIGN NOTE:
Final design and shop drawings shall be supplied by the fabricator. An Arizona registered engineer is required to sign and seal the submittal of shop drawings.

NOTES

ENVIRONMENTS & EXPERIENCES

merje

120 North Church Street
Suite 208
West Chester, PA 19380
T 484.266.0648
www.merjedesign.com

CLIENT / PROJECT

Lake Havasu City, AZ Wayfinding Program

PROJECT NO.

SUBCONSULTANT

SHEET TITLE

Material & Vinyl Color Chart

DATE January 8, 2015

DRAWN BY: JC/PR

REVISIONS

February 10, 2015

August 2016

These drawings are meant for DESIGN INTENT ONLY and are not for construction. Contractor shall verify and be responsible for all dimensions and conditions of the job. Contractor shall be familiar with the site and conditions it presents. This office must be notified of any variations from the dimensions and conditions shown on this drawing. Shop drawings and details must be submitted to this office for approval prior to proceeding with fabrication. All copy shall be proofread by client and legal requirements checked by legal department.

SHEET NO.

A.7

DIST.1
Large District Gateway

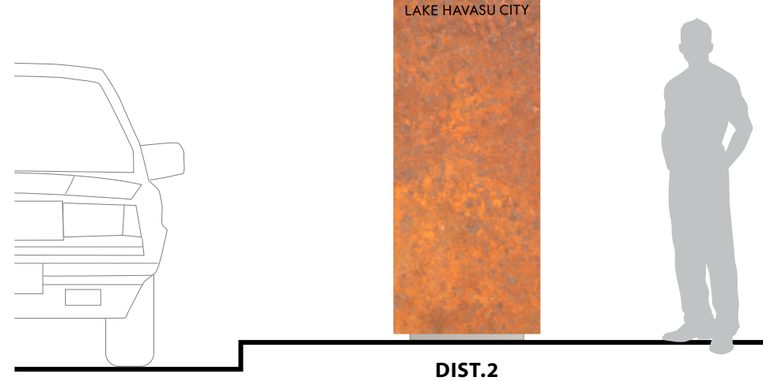

DIST.2
Small District Gateway

LEGEND

Menu of Sign Types
Large District Gateway
Small District Gateway

ENVIRONMENTS & EXPERIENCES
merje
120 North Church Street
Suite 208
West Chester, PA 19380
T 484.266.0648
www.merjedesign.com

SUBCONSULTANT

DATE January 8, 2015

DRAWN BY: JC/PR

These drawings are meant for DESIGN INTENT ONLY and are not for construction. Contractor shall verify and be responsible for all dimensions and conditions of the job. Contractor shall be familiar with the site and conditions it presents. This office must be notified of any variations from the dimensions and conditions shown on this drawing. Shop drawings and details must be submitted to this office for approval prior to proceeding with fabrication. All copy shall be proofread by client and legal requirements checked by legal department.

REVISIONS February 10, 2015
August 2016

CLIENT / PROJECT
Lake Havasu City, AZ
Wayfinding Program

PROJECT NO.

SHEET TITLE
Menu of Sign Types
DISTRICT GATEWAYS

SHEET NO.
B.1

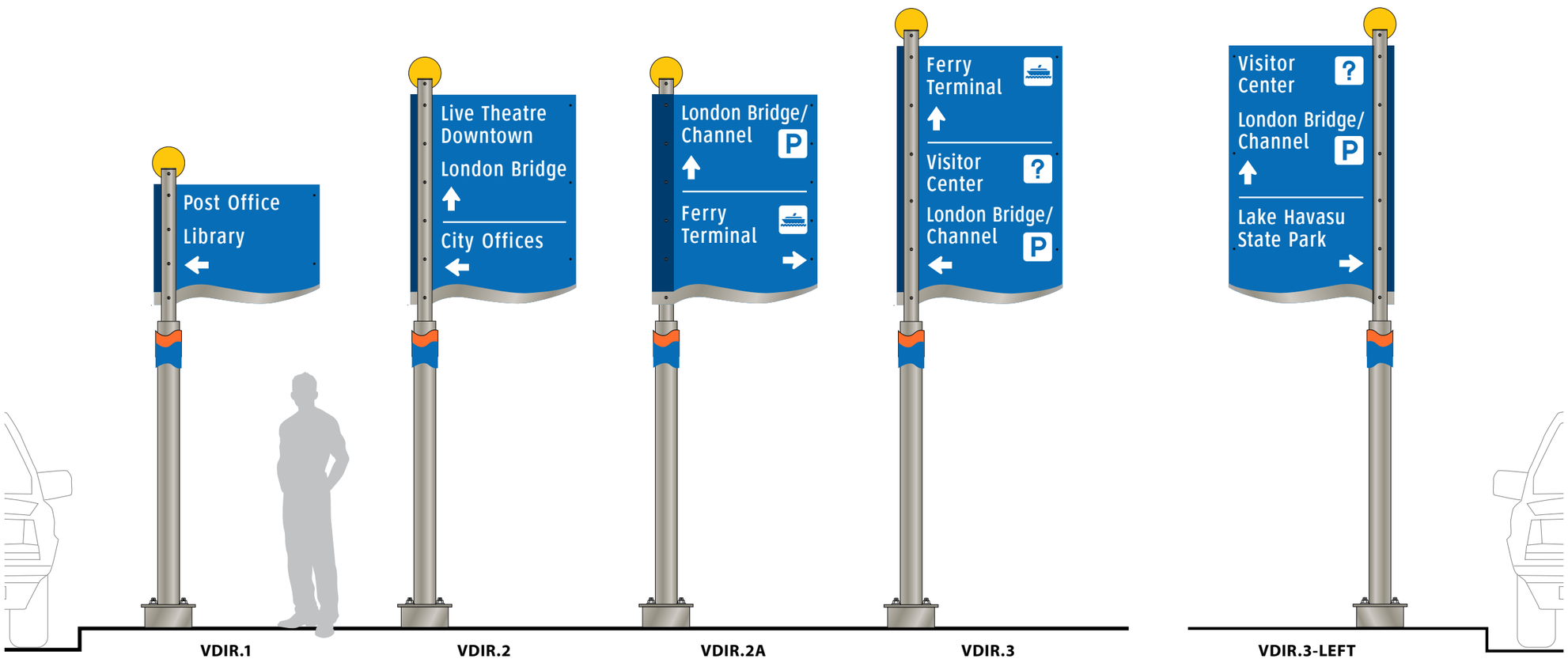

VDIR.1
Vehicular Directional
(4" Message)

VDIR.2
Vehicular Directional
(4" Message)

VDIR.2A
Vehicular Directional
[Double-Sided]
(4" Message)

VDIR.3
Vehicular Directional
(4" Message)

VDIR.3-LEFT
Vehicular Directional
(4" Message)

LEGEND

Menu of Sign Types
Vehicular Directionals; 4" Messages

ENVIRONMENTS & EXPERIENCES
merje
120 North Church Street
Suite 208
West Chester, PA 19380
T 484.266.0648
www.merjedesign.com

SUBCONSULTANT

DATE January 8, 2015

DRAWN BY: JC/PR

These drawings are meant for DESIGN INTENT ONLY and are not for construction. Contractor shall verify and be responsible for all dimensions and conditions of the job. Contractor shall be familiar with the site and conditions it presents. This office must be notified of any variations from the dimensions and conditions shown on this drawing. Shop drawings and details must be submitted to this office for approval prior to proceeding with fabrication. All copy shall be proofread by client and legal requirements checked by legal department.

REVISIONS February 10, 2015
August 2016

CLIENT / PROJECT
Lake Havasu City, AZ
Wayfinding Program

PROJECT NO.

SHEET TITLE
Menu of Sign Types
VEHICULAR
4" Message

SHEET NO.
B.2

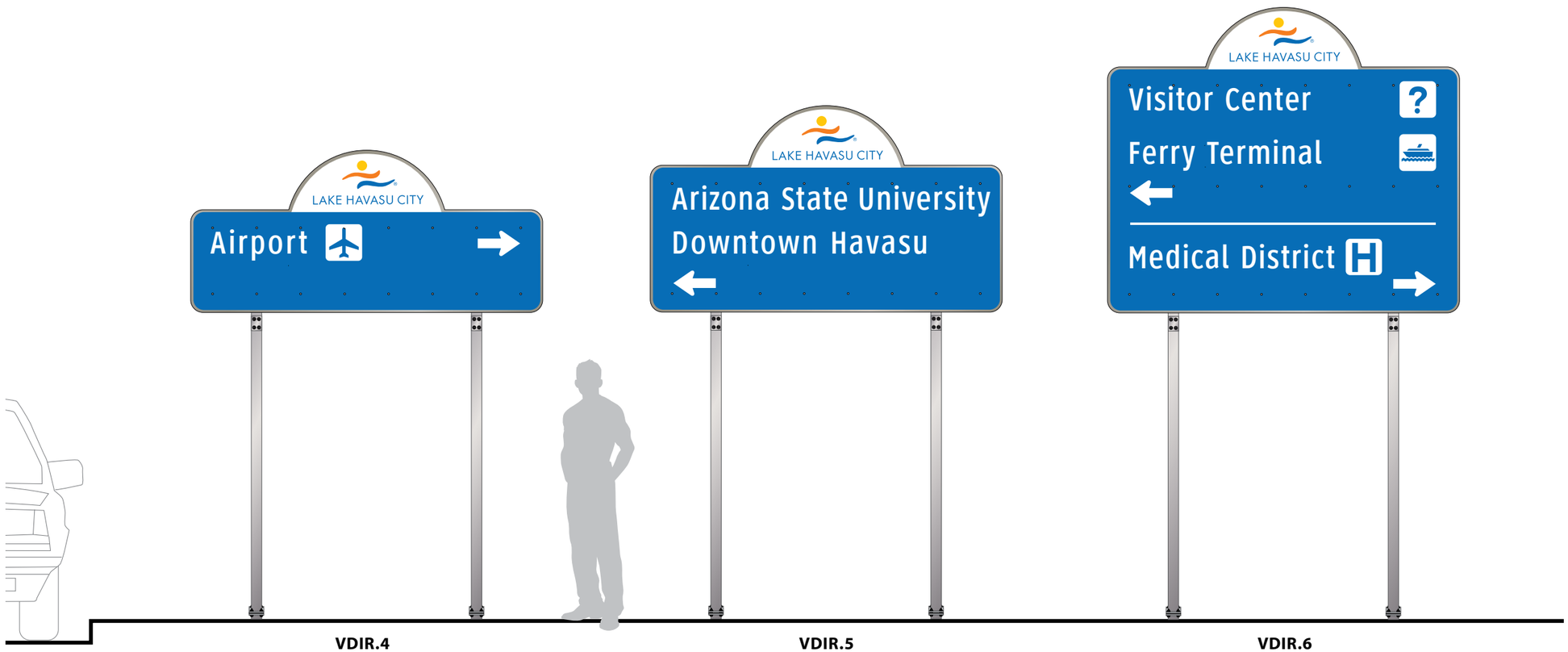

VDIR.4
Vehicular Directional
(6" Message)

VDIR.5
Vehicular Directional
(6" Message)

VDIR.6
Vehicular Directional
(6" Message)

LEGEND

Menu of Sign Types
Vehicular Directionals; 6" Messages

ENVIRONMENTS & EXPERIENCES
merje
120 North Church Street
Suite 208
West Chester, PA 19380
T 484.266.0648
www.merjedesign.com

SUBCONSULTANT

DATE January 8, 2015

DRAWN BY: JC/PR

These drawings are meant for DESIGN INTENT ONLY and are not for construction. Contractor shall verify and be responsible for all dimensions and conditions of the job. Contractor shall be familiar with the site and conditions it presents. This office must be notified of any variations from the dimensions and conditions shown on this drawing. Shop drawings and details must be submitted to this office for approval prior to proceeding with fabrication. All copy shall be proofread by client and legal requirements checked by legal department.

REVISIONS February 10, 2015
August 2016

CLIENT / PROJECT
Lake Havasu City, AZ
Wayfinding Program

PROJECT NO.

SHEET TITLE
Menu of Sign Types
VEHICULAR
6" Message

SHEET NO.
B.3

DEST.1
Destination ID
[Double-Sided]

RESIDENT.1
Residential Directional
(4" Message)

PDIR.1
Pedestrian Directional
(1" Messages)

PARK.1A
Parking Trailblazer
(Arrow Only)

PARK.2
Parking Exit
Directional

PARK.5A
Parking Lot Identification
[Double-Sided]

PARK.6
Parking Lot Identification

PARK.2A
Parking Exit Directional
(Wall Application)

LEGEND

Menu of Sign Types

Destination Identification
Residential Identification
Pedestrian Directional
Parking Trailblazer
Parking Directional
Parking Lot Identification

ENVIRONMENTS & EXPERIENCES
merje
120 North Church Street
Suite 208
West Chester, PA 19380
T 484.266.0648
www.merjedesign.com

SUBCONSULTANT

DATE January 8, 2015

DRAWN BY: JC/PR

These drawings are meant for DESIGN INTENT ONLY and are not for construction. Contractor shall verify and be responsible for all dimensions and conditions of the job. Contractor shall be familiar with the site and conditions it presents. This office must be notified of any variations from the dimensions and conditions shown on this drawing. Shop drawings and details must be submitted to this office for approval prior to proceeding with fabrication. All copy shall be proofread by client and legal requirements checked by legal department.

REVISIONS February 10, 2015
August 2016

CLIENT / PROJECT
Lake Havasu City, AZ Wayfinding Program

PROJECT NO.

SHEET TITLE
Menu of Sign Types DESTINATION & PARKING

SHEET NO.
B.4

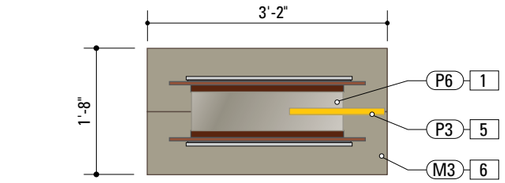

4 Top View: DIST.1
SCALE: 1/2" = 1'-0"

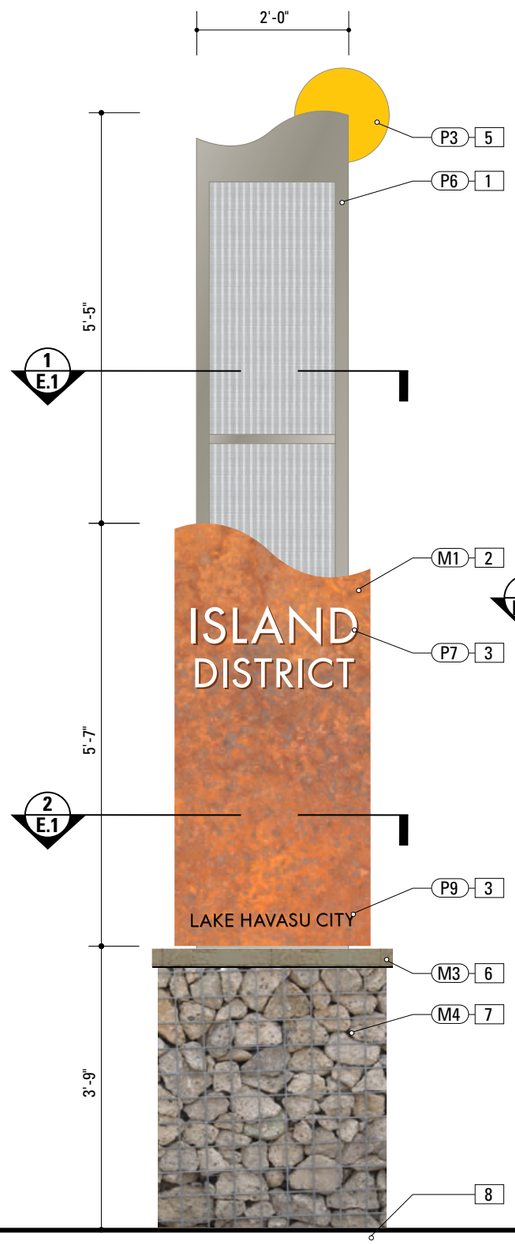

1 Front View: DIST.1
SCALE: 1/2" = 1'-0"

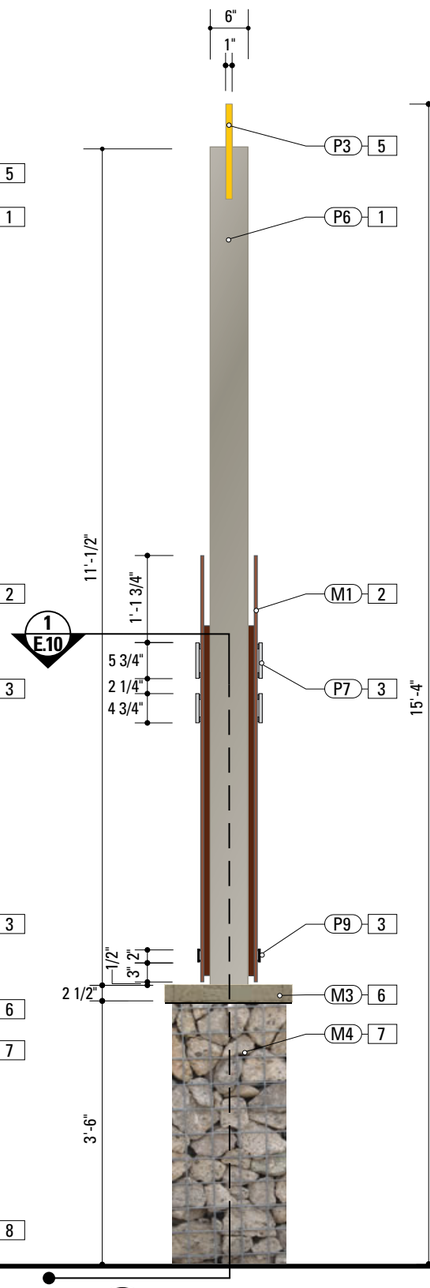

2 Side View: DIST.1
SCALE: 1/2" = 1'-0"

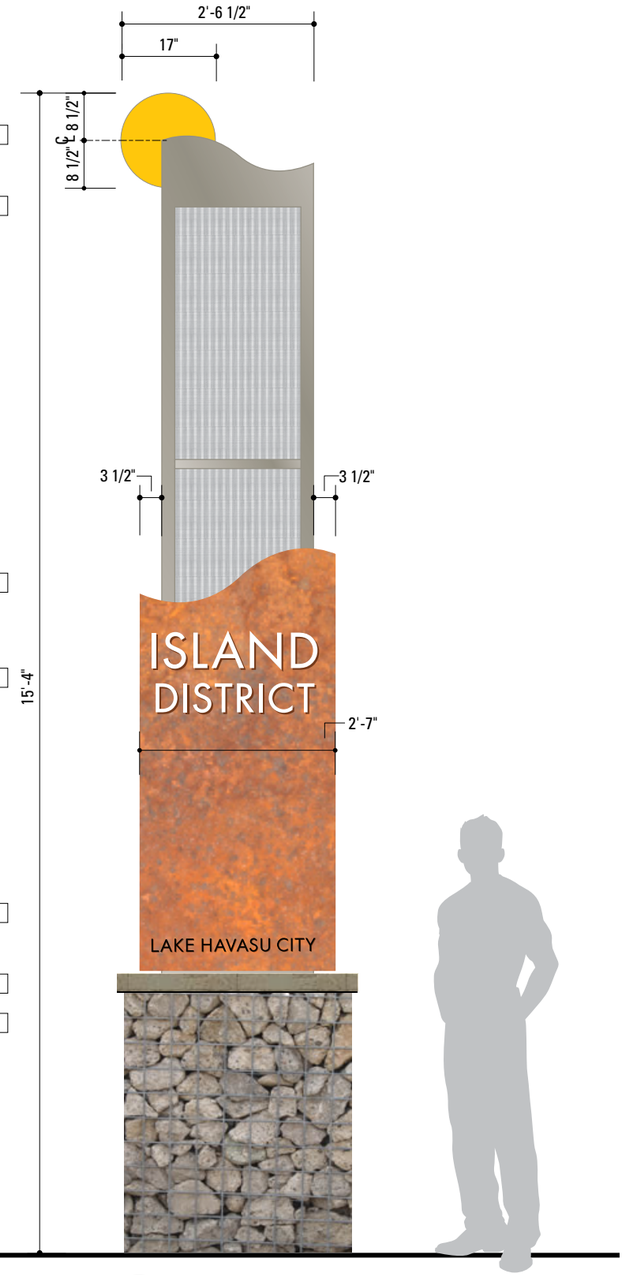

3 Rear View: DIST.1
SCALE: 1/2" = 1'-0"

SPECIFICATIONS **SIGN TYPE:** DIST.1 **FUNCTION:** Large District Gateway

1. **SCREEN PANEL**
   FRAME MATERIAL: Aluminum extrusion and sheet
   FABRICATION PROCESS: Extruded framing / Fabricated
   EDGES: Square, Smooth
   WIRE MESH: McNichols Shire 8314 SS type 304
   COLOR: Custom, as noted
   SURFACE PROCESS: Paint all exposed surfaces with Matthews Acrylic Polyurethane, with clear coat satin finish.
   WIRE MESH FASTENERS: Exposed tamper-resistant fasteners.
   FRAME FASTENERS: Stitch-weld and mechanically fasten to base plate.

2. **CORTEN PANELS**
   MATERIAL: 1/4" thick Corten steel sheet
   FABRICATION PROCESS: "L" brackets stich-weld to back side, mechanically fasten to anchor plates stich-welded to (recommended) 5" sq. steel posts.
   EDGES: Smooth
   COLOR: Natural mill finish
   SURFACE PROCESS: Natural mill finish
   FASTENERS: Steel posts stich-weld to base plate.
   FOOTER: Plate-to-plate sub-surface.

3. **LETTERS 1/2 INCH**
   MATERIAL: 1/2" thick Aluminum sheet
   FABRICATION PROCESS: Water-jet cut
   EDGES: Square, Smooth
   SURFACE PROCESS: Paint all exposed surfaces with Matthews Acrylic Polyurethane, with clear coat satin finish.
   FASTENER: Pin-mount to Corten panel surface, with 1/8" thk Teflon spacers, or approved equal.

4. **LETTERS 1/4 INCH**
   MATERIAL: 1/4" thick acrylic sheet
   FABRICATION PROCESS: Router-cut
   EDGES: Square, Smooth
   SURFACE PROCESS: Paint all exposed surfaces with Matthews Acrylic Polyurethane, with clear coat satin finish.
   FASTENER: Pin-mount to Corten panel surface, with 1/8" thk Teflon spacers, or approved equal.

5. **GATEWAY DISC**
   MATERIAL: 1" thick Aluminum tube and sheet
   FABRICATION PROCESS: Fabricated
   EDGES: Square, Smooth
   SURFACE PROCESS: Paint all exposed surfaces with Matthews Acrylic Polyurethane, with clear coat satin finish.
   FASTENER: Stitch-weld to top of Screen Panel framing.

6. **CONCRETE CAP**
   MATERIAL: Formed concrete caps, 1 color.
   FABRICATION PROCESS: Formed and poured colored concrete, with beveled top edges.
   CAP COLOR: Natural
   FASTENER: Mechanically fasten to ledge (Corten steel sheet stitch-welded to 5" sq. steel posts).

7. **GABION BASKETS**
   MATERIAL: Rugged high tensile wire mesh coated with corrosion-resistant layer of zinc
   FABRICATION PROCESS: Custom manufactured, welded
   SIZE: 3'-6"H x 3'-0"L x 1'-6"W baskets
   COLOR: Natural warm colors
   STONE: Local river rock, a mix of 3-6" dia. to be approved by Client.
   FASTENER: Lid is secured with spiral binders, lacing wire or utilizing "C" rings.

8. **PLATE-TO-PLATE FOOTER**
   MATERIAL: 3/4" thick steel sheet base plate
   COLOR: Natural mill finish
   SURFACE PROCESS: Natural mill finish
   FASTENERS: Steel posts stich-weld to base plate. Mechanically fasten to footer with shims for leveling.
   FOOTER: Must be a minimum of 4" below grade.

DESIGN NOTE:
Final design and shop drawings shall be supplied by the fabricator. An Arizona registered engineer is required to sign and seal the submittal of shop drawings.

NOTES

1. Fabricator shall verify the mounting conditions and provide a detail drawing for each mounting situation, prior to fabrication. Fabricator shall obtain approval from the Designer or Client for placement prior to fabrication.
2. Welds: All welds shall be ground smooth, paint all seams.
3. Hardware: All fasteners shall be concealed. If exposed, hardware shall be tamper proof fasteners, corrosion resistant, and color matching adjacent surfaces.
4. All painted sign surfaces to receive UV/Anti-Graffiti spray coating. All sign surfaces with reflective graphics to receive 3M approved UV/Anti-Graffiti overlaminate.

ENVIRONMENTS & EXPERIENCES
merje
120 North Church Street
Suite 208
West Chester, PA 19380
T 484.266.0648
www.merjedesign.com

CLIENT / PROJECT
Lake Havasu City, AZ Wayfinding Program

PROJECT NO.

SUBCONSULTANT

DATE January 8, 2015

DRAWN BY: JC/PR

REVISIONS
February 10, 2015
August 2016

SHEET TITLE
DIST.1
Large District Gateway

SHEET NO.
C.1

These drawings are meant for DESIGN INTENT ONLY and are not for construction. Contractor shall verify and be responsible for all dimensions and conditions of the job. Contractor shall be familiar with the site and conditions it presents. This office must be notified of any variations from the dimensions and conditions shown on this drawing. Shop drawings and details must be submitted to this office for approval prior to proceeding with fabrication. All copy shall be proofread by client and legal requirements checked by legal department.

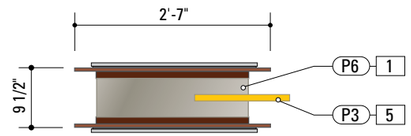

4 Top View: DIST.2
SCALE: 1/2" = 1'-0"

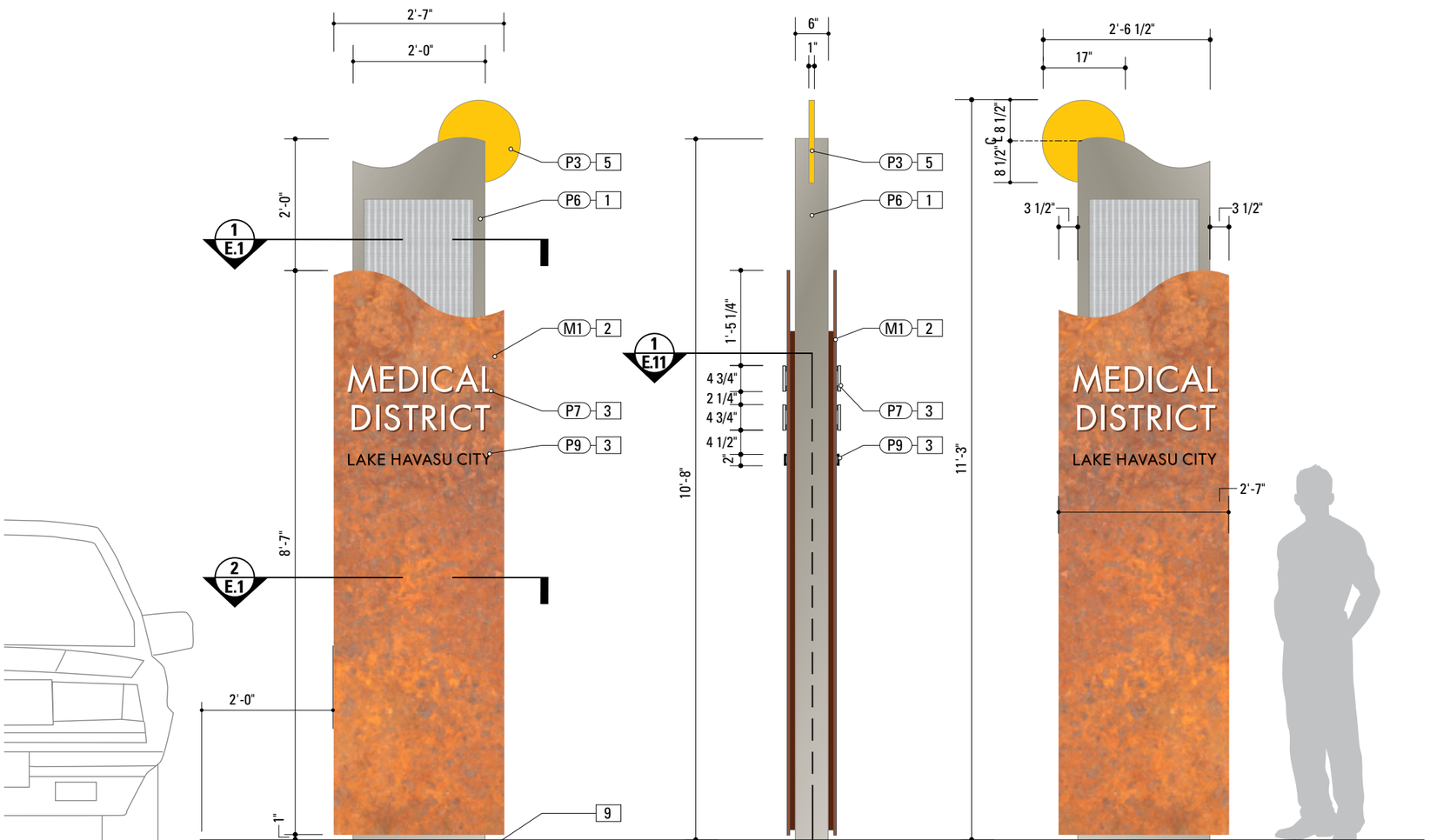

1 Front View: DIST.2
SCALE: 1/2" = 1'-0"

2 Side View: DIST.2
SCALE: 1/2" = 1'-0"

3 Rear View: DIST.2
SCALE: 1/2" = 1'-0"

SPECIFICATIONS **SIGN TYPE:** DIST.2 **FUNCTION:** Small District Gateway

1. **SCREEN PANEL**
   FRAME MATERIAL: Aluminum extrusion and sheet
   FABRICATION PROCESS: Extruded framing / Fabricated
   EDGES: Square, Smooth
   WIRE MESH: McNichols Shire 8314 SS type 304
   COLOR: Custom, as noted
   SURFACE PROCESS: Paint all exposed surfaces with Matthews Acrylic Polyurethane, with clear coat satin finish.
   WIRE MESH FASTENERS: Exposed tamper-resistant fasteners.
   FRAME FASTENERS: Stitch-weld and mechanically fasten to base plate.

2. **CORTEN PANELS**
   MATERIAL: 1/4" thick Corten steel sheet
   FABRICATION PROCESS: "L" brackets stich-weld to back side, mechanically fasten to anchor plates stich-welded to (recommended) 5" sq. steel posts.
   EDGES: Smooth
   COLOR: Natural mill finish
   SURFACE PROCESS: Natural mill finish
   FASTENERS: Steel posts stich-weld to base plate.
   FOOTER: Plate-to-plate sub-surface.

3. **LETTERS 1/2 INCH**
   MATERIAL: 1/2" thick Aluminum sheet
   FABRICATION PROCESS: Water-jet cut
   EDGES: Square, Smooth
   SURFACE PROCESS: Paint all exposed surfaces with Matthews Acrylic Polyurethane, with clear coat satin finish.
   FASTENER: Pin-mount to Corten panel surface, with 1/8" thk Teflon spacers, or approved equal.

4. **LETTERS 1/4 INCH**
   MATERIAL: 1/4" thick acrylic sheet
   FABRICATION PROCESS: Router-cut
   EDGES: Square, Smooth
   SURFACE PROCESS: Paint all exposed surfaces with Matthews Acrylic Polyurethane, with clear coat satin finish.
   FASTENER: Pin-mount to Corten panel surface, with 1/8" thk Teflon spacers, or approved equal.

5. **GATEWAY DISC**
   MATERIAL: 1" thick Aluminum tube and sheet
   FABRICATION PROCESS: Fabricated
   EDGES: Square, Smooth
   SURFACE PROCESS: Paint all exposed surfaces with Matthews Acrylic Polyurethane, with clear coat satin finish.
   FASTENER: Stitch-weld to top of Screen Panel framing.

9. **GATEWAY BREAKAWAY FOOTER**
   MATERIAL: 3/4" thick steel sheet base plate
   COLOR: Natural mill finish
   SURFACE PROCESS: Natural mill finish
   FASTENERS: The Transpo® 5100 Pole-Safe break-away system, according to specifications per ADOT.
   FOOTER: At grade. Corten steel panels should be 1" above footer concrete.

DESIGN NOTE:
Final design and shop drawings shall be supplied by the fabricator. An Arizona registered engineer is required to sign and seal the submittal of shop drawings.

NOTES
1. Fabricator shall verify the mounting conditions and provide a detail drawing for each mounting situation, prior to fabrication. Fabricator shall obtain approval from the Designer or Client for placement prior to fabrication.
2. Welds: All welds shall be ground smooth, paint all seams.
3. Hardware: All fasteners shall be concealed. If exposed, hardware shall be tamper proof fasteners, corrosion resistant, and color matching adjacent surfaces.
4. All painted sign surfaces to receive UV/Anti-Graffiti spray coating. All sign surfaces with reflective graphics to receive 3M approved UV/Anti-Graffiti overlaminate.

ENVIRONMENTS & EXPERIENCES
merje
120 North Church Street
Suite 208
West Chester, PA 19380
T 484.266.0648
www.merjedesign.com

CLIENT / PROJECT
Lake Havasu City, AZ Wayfinding Program

PROJECT NO.

SUBCONSULTANT

DATE January 8, 2015

DRAWN BY: JC/PR

REVISIONS
February 10, 2015
August 2016

SHEET TITLE
DIST.2
Small District Gateway

SHEET NO.
C.2

These drawings are meant for DESIGN INTENT ONLY and are not for construction. Contractor shall verify and be responsible for all dimensions and conditions of the job. Contractor shall be familiar with the site and conditions it presents. This office must be notified of any variations from the dimensions and conditions shown on this drawing. Shop drawings and details must be submitted to this office for approval prior to proceeding with fabrication. All copy shall be proofread by client and legal requirements checked by legal department.

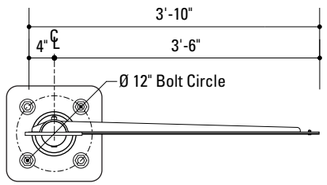

4 Top View: VDIR.1
SCALE: 1/2" = 1'-0"

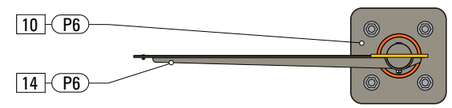

5 Top View: VDIR.1
SCALE: 1/2" = 1'-0"

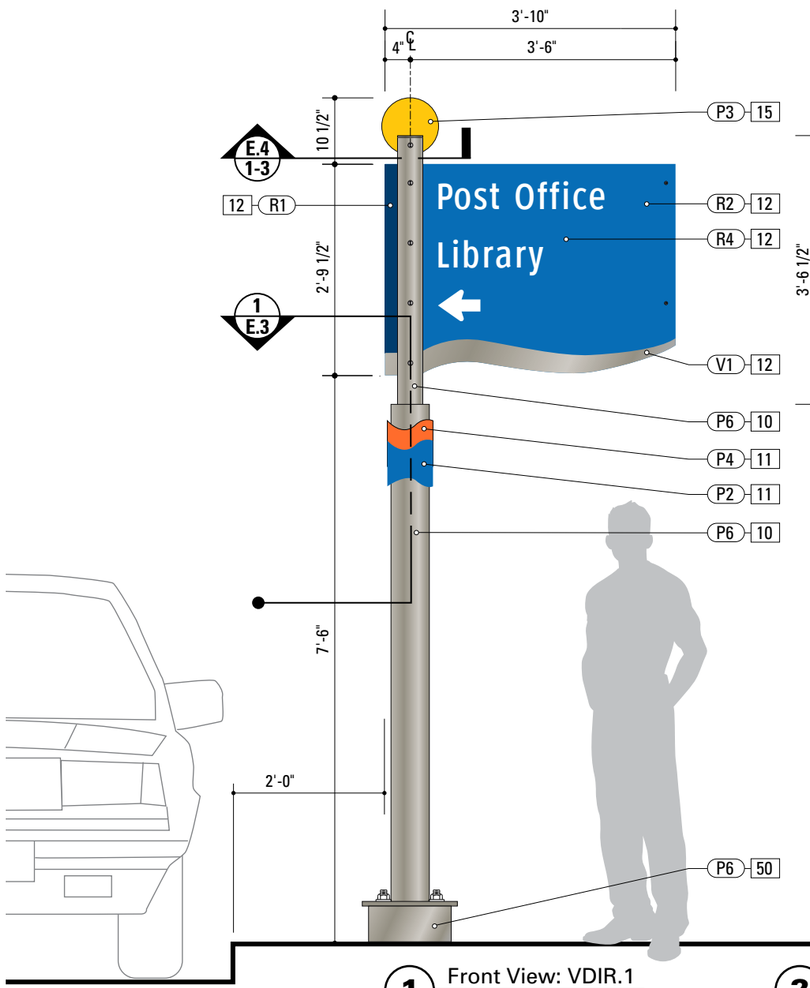

1 Front View: VDIR.1
SCALE: 1/2" = 1'-0"

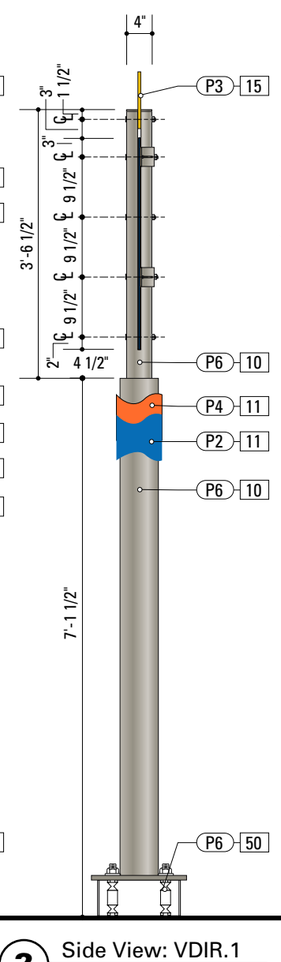

2 Side View: VDIR.1
SCALE: 1/2" = 1'-0"

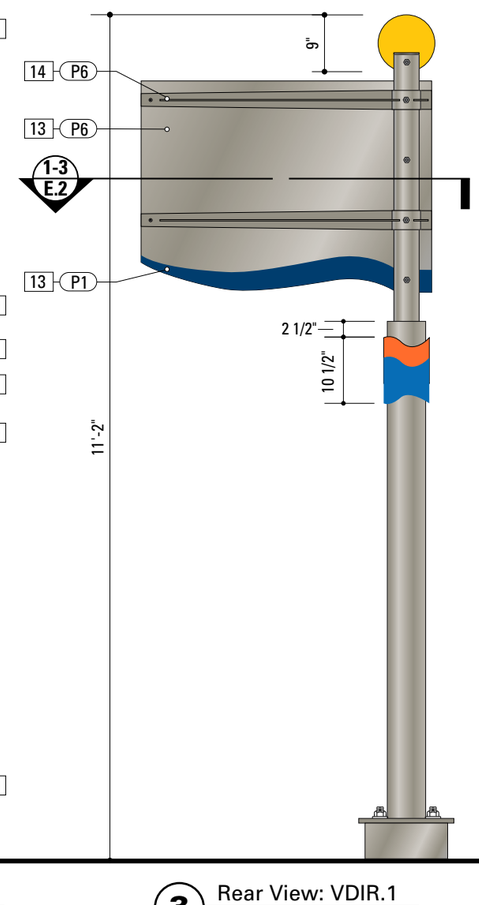

3 Rear View: VDIR.1
SCALE: 1/2" = 1'-0"

SPECIFICATIONS **SIGN TYPE:** VDIR.1 **FUNCTION:** Vehicular Directional

10. 3.5-to-5 POLE
LOWER POLE MATERIAL: Aluminum SCH 40 Pipe 6061T6 - 5 (5.563" OD x .258" wall)
UPPER POLE MATERIAL: Aluminum SCH 40 Pipe 6061T6 - 3.5 (4.00" OD x .226" wall)
FABRICATION PROCESS: Extruded, router cut
EDGES: Smooth
COLOR: Custom, as noted
SURFACE PROCESS: Paint all exposed surfaces with Matthews Acrylic Polyurethane, with clear coat satin finish.
FASTENERS: 3 internal gusset rings, with top cap, are stitch-weld and drilled with fill-welds.
BASE PLATE: 1/2" thk Aluminum sheet
FOOTER: Transpo® 5100 Pole-Safe break-away system, according to specifications per ADOT.

11. CLAMSHELL COLLAR
MATERIAL: Cast Aluminum
FABRICATION PROCESS: Custom cast clamshell
EDGES: Smooth
COLOR: Custom, as noted
SURFACE PROCESS: Paint all exposed surfaces with Matthews Acrylic Polyurethane, with clear coat satin finish.
FASTENER: Mechanically to pole with SS tamper-resistant fasteners.

12. SIGN PANEL - REFLECTIVE
MATERIAL: 1/8" thk Aluminum sheet
FABRICATION PROCESS: Router Cut
EDGES: Smooth
PANEL EDGES PROCESS: Paint all panel edges with Matthews Acrylic Polyurethane, with clear coat satin finish.
COLOR: Custom, as noted
GRAPHIC BACKGROUND AND COPY PROCESS: 3M custom inks print direct to 3930 with 3M approved UV/Graffiti Vinyl Over-laminate. (See Color Sheet for all color and material specifications)
FASTENER: Press-roll per 3M requirements.
SS tamper-resistant hardware (Spanner bolt, expanded PTFE sealing washers, and Flex-Top expanding lock-nuts).

13. SIGN PANEL - BACK
COLOR: custom, as noted
SURFACE PROCESS: Paint all exposed surfaces with Matthews Acrylic Polyurethane, with clear coat satin finish.

14. SUPPORT ARM - SIGN PANEL
MATERIAL: 1/4" thk Aluminum sheet
FABRICATION PROCESS: Router Cut, Brake-formed
EDGES: Square, Smooth
COLOR: custom, as noted
SURFACE PROCESS: Paint all exposed surfaces with Matthews Acrylic Polyurethane, with clear coat satin finish.
FASTENER: Stitch-weld. SS tamper-resistant hardware (Spanner bolt, expanded PTFE sealing washers, and Flex-Top expanding lock-nuts).

15. DISC + TOP CAP
MATERIAL: 1/4" thk Aluminum sheet
FABRICATION PROCESS: Router Cut
EDGES: Smooth
COLOR: Custom, as noted.
SURFACE PROCESS: Paint all exposed surfaces with Matthews Acrylic Polyurethane, with clear coat satin finish.
FASTENER: Stitch-weld. SS tamper-resistant hardware (Spanner bolt, expanded PTFE sealing washers, and Flex-Top expanding lock-nuts).

50. BREAKAWAY SYSTEM
SYSTEM: The Transpo® Pole-Safe 5100 break-away system, according to specifications per ADOT.
SKIRT: The Transpo® Pole-Safe Skirt.

DESIGN NOTE:
Final design and shop drawings shall be supplied by the fabricator. An Arizona registered engineer is required to sign and seal the submittal of shop drawings.

NOTES
1. Fabricator shall verify the mounting conditions and provide a detail drawing for each mounting situation, prior to fabrication. Fabricator shall obtain approval from the Designer or Client for placement prior to fabrication.
2. Welds: All welds shall be ground smooth, paint all seams.
3. Hardware: All fasteners shall be concealed. If exposed, hardware shall be tamper proof fasteners, corrosion resistant, and color matching adjacent surfaces.
4. All painted sign surfaces to receive UV/Anti-Graffiti spray coating. All sign surfaces with reflective graphics to receive 3M approved UV/Anti-Graffiti overlaminate.

ENVIRONMENTS & EXPERIENCES
merje
120 North Church Street
Suite 208
West Chester, PA 19380
T 484.266.0648
www.merjedesign.com

CLIENT / PROJECT
Lake Havasu City, AZ Wayfinding Program

PROJECT NO.

SUBCONSULTANT

DATE January 8, 2015
DRAWN BY: JC/PR

REVISIONS
February 10, 2015
August 2016

SHEET TITLE
VDIR.1 Vehicular Directional

SHEET NO.
C.3

These drawings are meant for DESIGN INTENT ONLY and are not for construction. Contractor shall verify and be responsible for all dimensions and conditions of the job. Contractor shall be familiar with the site and conditions it presents. This office must be notified of any variations from the dimensions and conditions shown on this drawing. Shop drawings and details must be submitted to this office for approval prior to proceeding with fabrication. All copy shall be proofread by client and legal requirements checked by legal department.

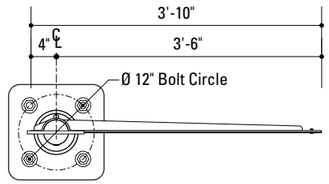

4 Top View: VDIR.2
SCALE: 1/2" = 1'-0"

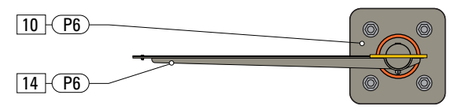

5 Top View: VDIR.2
SCALE: 1/2" = 1'-0"

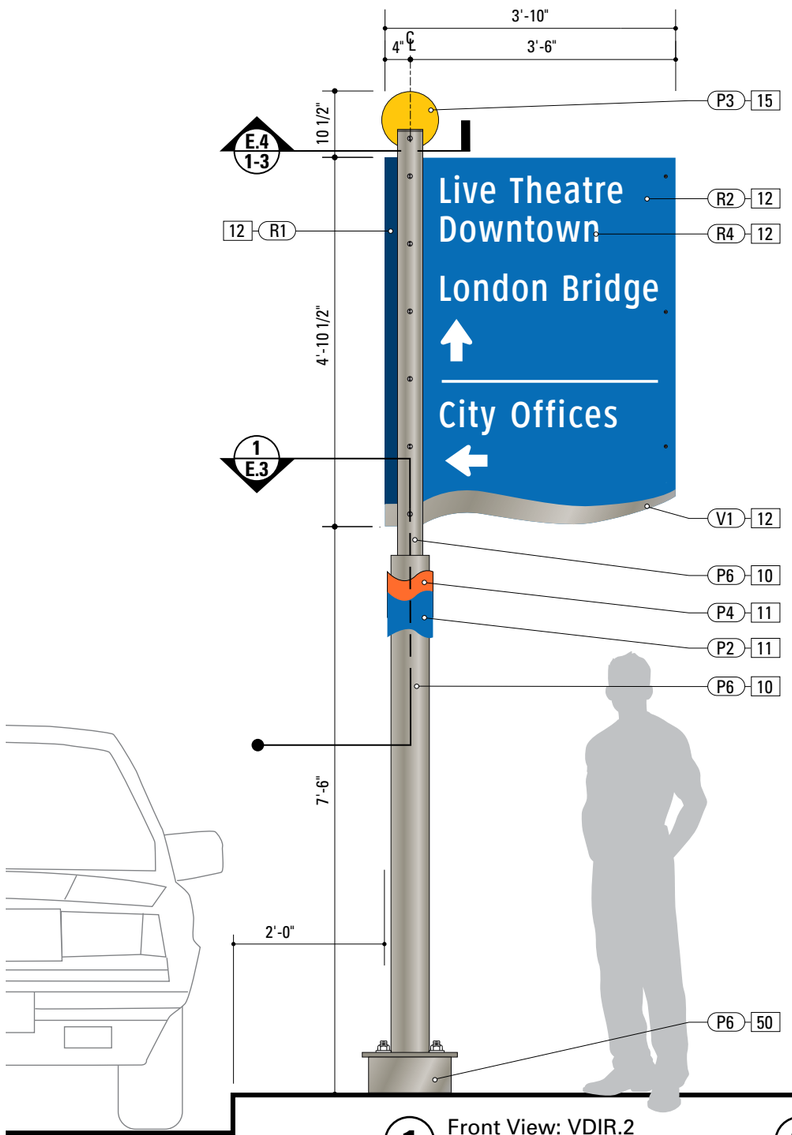

1 Front View: VDIR.2
SCALE: 1/2" = 1'-0"

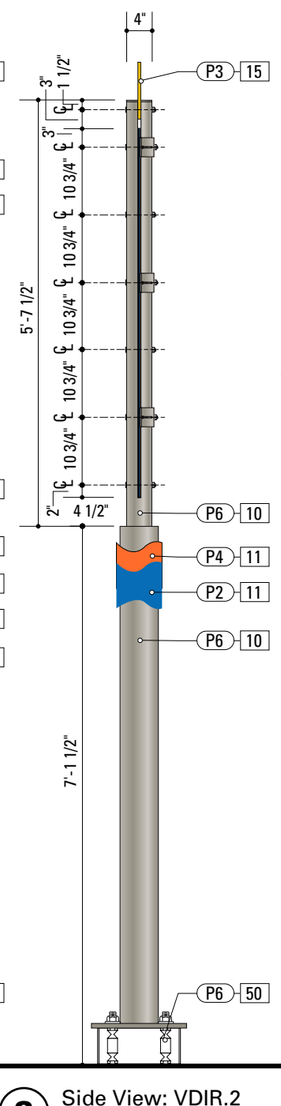

2 Side View: VDIR.2
SCALE: 1/2" = 1'-0"

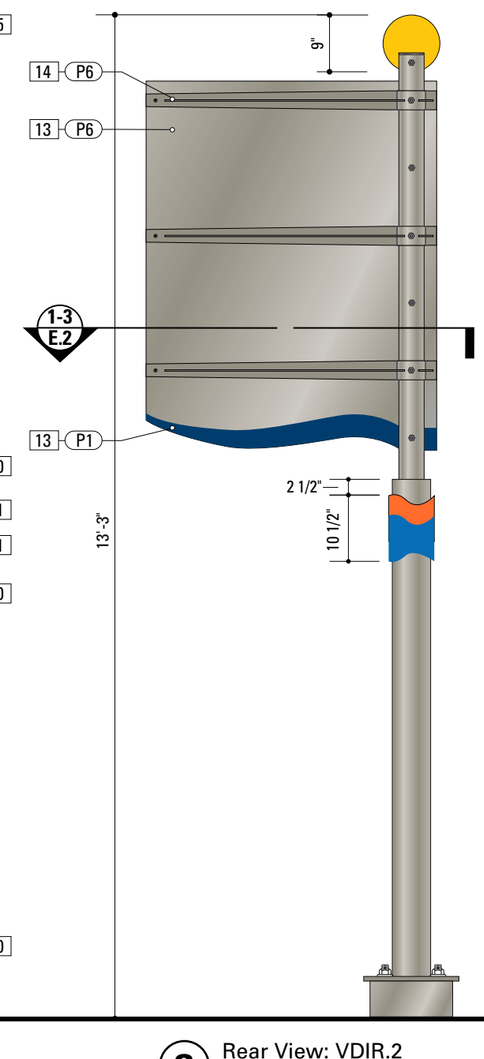

3 Rear View: VDIR.2
SCALE: 1/2" = 1'-0"

SPECIFICATIONS **SIGN TYPE:** VDIR.2 **FUNCTION:** Vehicular Directional

10. 3.5-to-5 POLE
LOWER POLE MATERIAL: Aluminum SCH 40 Pipe 6061T6 - 5 (5.563" OD x .258" wall)
UPPER POLE MATERIAL: Aluminum SCH 40 Pipe 6061T6 - 3.5 (4.00" OD x .226" wall)
FABRICATION PROCESS: Extruded, router cut
EDGES: Smooth
COLOR: Custom, as noted
SURFACE PROCESS: Paint all exposed surfaces with Matthews Acrylic Polyurethane, with clear coat satin finish.
FASTENERS: 3 internal gusset rings, with top cap, are stitch-weld and drilled with fill-welds.
BASE PLATE: 1/2" thk Aluminum sheet
FOOTER: Transpo® 5100 Pole-Safe break-away system, according to specifications per ADOT.

11. CLAMSHELL COLLAR
MATERIAL: Cast Aluminum
FABRICATION PROCESS: Custom cast clamshell
EDGES: Smooth
COLOR: Custom, as noted
SURFACE PROCESS: Paint all exposed surfaces with Matthews Acrylic Polyurethane, with clear coat satin finish.
FASTENER: Mechanically to pole with SS tamper-resistant fasteners.

12. SIGN PANEL - REFLECTIVE
MATERIAL: 1/8" thk Aluminum sheet
FABRICATION PROCESS: Router Cut
EDGES: Smooth
PANEL EDGES PROCESS: Paint all panel edges with Matthews Acrylic Polyurethane, with clear coat satin finish.
COLOR: Custom, as noted
GRAPHIC BACKGROUND AND COPY PROCESS: 3M custom inks print direct to 3930 with 3M approved UV/Graffiti Vinyl Over-laminate. (See Color Sheet for all color and material specifications)
FASTENER: Press-roll per 3M requirements. SS tamper-resistant hardware (Spanner bolt, expanded PTFE sealing washers, and Flex-Top expanding lock-nuts).

13. SIGN PANEL - BACK
COLOR: custom, as noted
SURFACE PROCESS: Paint all exposed surfaces with Matthews Acrylic Polyurethane, with clear coat satin finish.

14. SUPPORT ARM - SIGN PANEL
MATERIAL: 1/4" thk Aluminum sheet
FABRICATION PROCESS: Router Cut, Brake-formed
EDGES: Square, Smooth
COLOR: custom, as noted
SURFACE PROCESS: Paint all exposed surfaces with Matthews Acrylic Polyurethane, with clear coat satin finish.
FASTENER: Stitch-weld. SS tamper-resistant hardware (Spanner bolt, expanded PTFE sealing washers, and Flex-Top expanding lock-nuts).

15. DISC + TOP CAP
MATERIAL: 1/4" thk Aluminum sheet
FABRICATION PROCESS: Router Cut
EDGES: Smooth
COLOR: Custom, as noted.
SURFACE PROCESS: Paint all exposed surfaces with Matthews Acrylic Polyurethane, with clear coat satin finish.
FASTENER: Stitch-weld. SS tamper-resistant hardware (Spanner bolt, expanded PTFE sealing washers, and Flex-Top expanding lock-nuts).

50. BREAKAWAY SYSTEM
SYSTEM: The Transpo® Pole-Safe 5100 break-away system, according to specifications per ADOT.
SKIRT: The Transpo® Pole-Safe Skirt.

DESIGN NOTE:
Final design and shop drawings shall be supplied by the fabricator. An Arizona registered engineer is required to sign and seal the submittal of shop drawings.

NOTES
1. Fabricator shall verify the mounting conditions and provide a detail drawing for each mounting situation, prior to fabrication. Fabricator shall obtain approval from the Designer or Client for placement prior to fabrication.
2. Welds: All welds shall be ground smooth, paint all seams.
3. Hardware: All fasteners shall be concealed. If exposed, hardware shall be tamper proof fasteners, corrosion resistant, and color matching adjacent surfaces.
4. All painted sign surfaces to receive UV/Anti-Graffiti spray coating. All sign surfaces with reflective graphics to receive 3M approved UV/Anti-Graffiti overlaminate.

ENVIRONMENTS & EXPERIENCES
merje
120 North Church Street
Suite 208
West Chester, PA 19380
T 484.266.0648
www.merjedesign.com

CLIENT / PROJECT
Lake Havasu City, AZ Wayfinding Program

PROJECT NO.

SUBCONSULTANT

DATE January 8, 2015
DRAWN BY: JC/PR

REVISIONS
February 10, 2015
August 2016

SHEET TITLE
VDIR.2 Vehicular Directional

SHEET NO.
C.4

These drawings are meant for DESIGN INTENT ONLY and are not for construction. Contractor shall verify and be responsible for all dimensions and conditions of the job. Contractor shall be familiar with the site and conditions it presents. This office must be notified of any variations from the dimensions and conditions shown on this drawing. Shop drawings and details must be submitted to this office for approval prior to proceeding with fabrication. All copy shall be proofread by client and legal requirements checked by legal department.

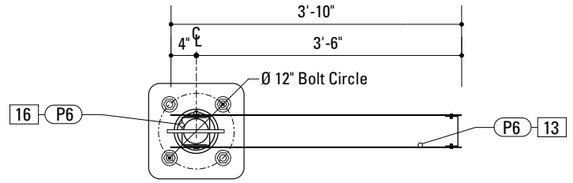

4 Top View: VDIR.2A
SCALE: 1/2" = 1'-0"

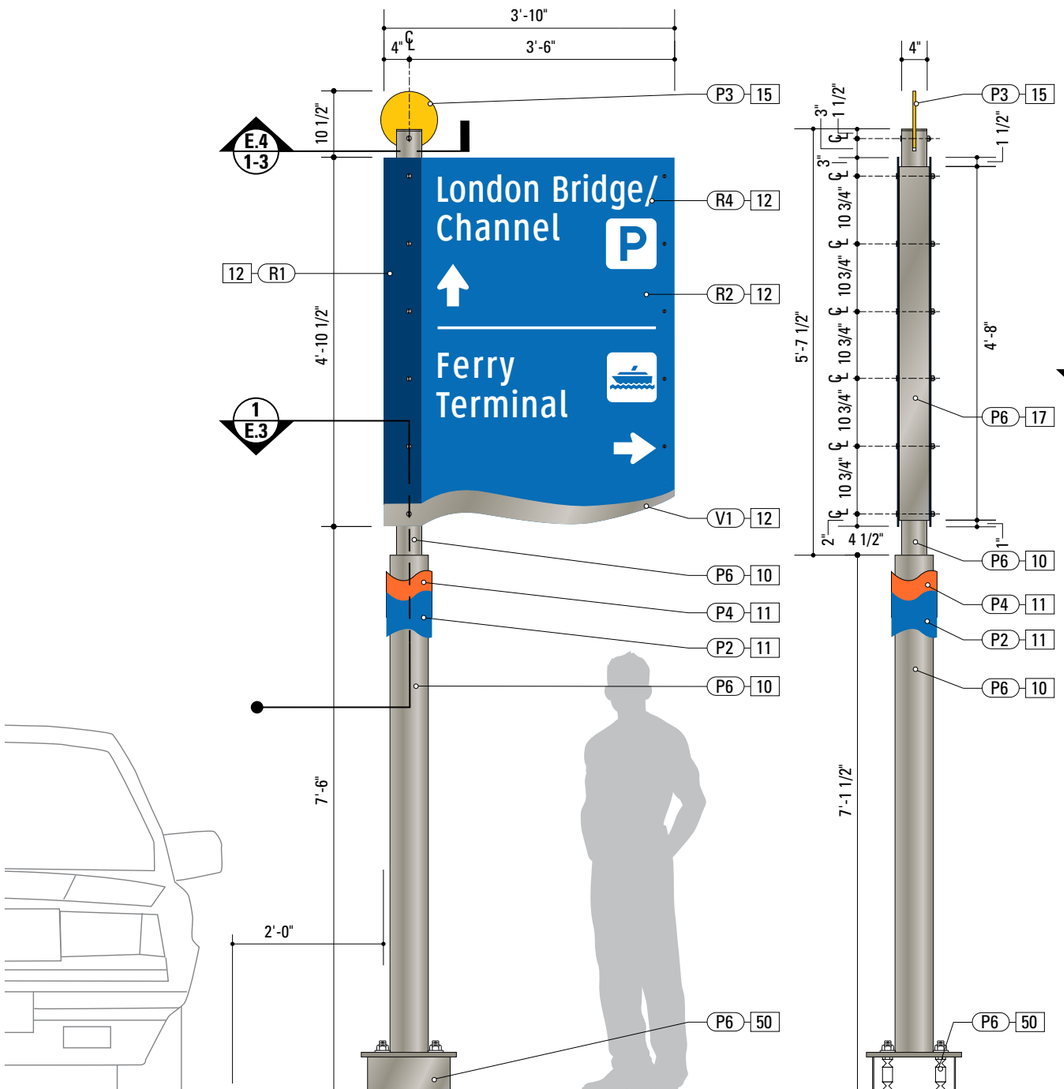

1 Front View: VDIR.2A
SCALE: 1/2" = 1'-0"

2 Side View: VDIR.2A
SCALE: 1/2" = 1'-0"

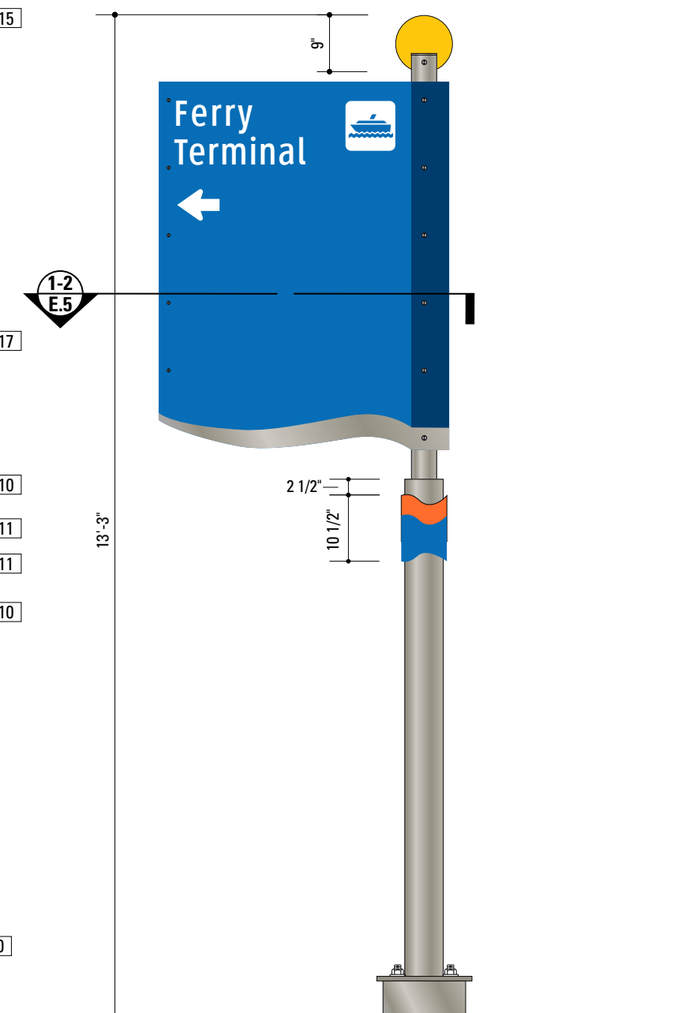

3 Rear View: VDIR.2A
SCALE: 1/2" = 1'-0"

SPECIFICATIONS **SIGN TYPE:** VDIR.2A **FUNCTION:** Vehicular Directional

10. 3.5-to-5 POLE
LOWER POLE MATERIAL: Aluminum SCH 40 Pipe 6061T6 - 5 (5.563" OD x .258" wall)
UPPER POLE MATERIAL: Aluminum SCH 40 Pipe 6061T6 - 3.5 (4.00" OD x .226" wall)
FABRICATION PROCESS: Extruded, router cut
EDGES: Smooth
COLOR: Custom, as noted
SURFACE PROCESS: Paint all exposed surfaces with Matthews Acrylic Polyurethane, with clear coat satin finish.
FASTENERS: 3 internal gusset rings, with top cap, are stitch-weld and drilled with fill-welds.
BASE PLATE: 1/2" thk Aluminum sheet
FOOTER: Transpo® 5100 Pole-Safe break-away system, according to specifications per ADOT.

11. CLAMSHELL COLLAR
MATERIAL: Cast Aluminum
FABRICATION PROCESS: Custom cast clamshell
EDGES: Smooth
COLOR: Custom, as noted
SURFACE PROCESS: Paint all exposed surfaces with Matthews Acrylic Polyurethane, with clear coat satin finish.
FASTENER: Mechanically to pole with SS tamper-resistant fasteners.

12. SIGN PANEL - REFLECTIVE
MATERIAL: 1/8" thk Aluminum sheet
FABRICATION PROCESS: Router Cut
EDGES: Smooth
PANEL EDGES PROCESS: Paint all panel edges with Matthews Acrylic Polyurethane, with clear coat satin finish.
COLOR: Custom, as noted
GRAPHIC BACKGROUND AND COPY PROCESS: 3M custom inks print direct to 3930 with 3M approved UV/Graffiti Vinyl Over-laminate. (See Color Sheet for all color and material specifications)
FASTENER: Press-roll per 3M requirements. SS tamper-resistant hardware (Spanner bolt, expanded PTFE sealing washers, and Flex-Top expanding lock-nuts).

13. SIGN PANEL - BACK
COLOR: custom, as noted
SURFACE PROCESS: Paint all exposed surfaces with Matthews Acrylic Polyurethane, with clear coat satin finish.

15. DISC + TOP CAP
MATERIAL: 1/4" thk Aluminum sheet
FABRICATION PROCESS: Router Cut
EDGES: Smooth
COLOR: Custom, as noted.
SURFACE PROCESS: Paint all exposed surfaces with Matthews Acrylic Polyurethane, with clear coat satin finish.
FASTENER: Stitch-weld. SS tamper-resistant hardware (Spanner bolt, expanded PTFE sealing washers, and Flex-Top expanding lock-nuts).

16. POST + PANEL BRACKET
MATERIAL: 1/8" thick Aluminum sheet
FABRICATION PROCESS: Router Cut, Brake-formed
EDGES: Square, Smooth
COLOR: custom, as noted
SURFACE PROCESS: Paint all exposed surfaces with Matthews Acrylic Polyurethane, with clear coat satin finish.
FASTENER: Stitch-weld to each sign panel. SS tamper-resistant hardware (Spanner bolt, expanded PTFE sealing washers, and Flex-Top expanding lock-nuts).

17. PANEL BRACKET
MATERIAL: 1/8" thick Aluminum sheet
FABRICATION PROCESS: Router Cut, Brake-formed
EDGES: Square, Smooth
COLOR: custom, as noted
SURFACE PROCESS: Paint all exposed surfaces with Matthews Acrylic Polyurethane, with clear coat satin finish.
FASTENER: SS tamper-resistant hardware (Spanner bolt, expanded PTFE sealing washers, and Flex-Top expanding lock-nuts).

50. BREAKAWAY SYSTEM
SYSTEM: The Transpo® Pole-Safe 5100 break-away system, according to specifications per ADOT.
SKIRT: The Transpo® Pole-Safe Skirt.

DESIGN NOTE:
Final design and shop drawings shall be supplied by the fabricator. An Arizona registered engineer is required to sign and seal the submittal of shop drawings.

NOTES
1. Fabricator shall verify the mounting conditions and provide a detail drawing for each mounting situation, prior to fabrication. Fabricator shall obtain approval from the Designer or Client for placement prior to fabrication.
2. Welds: All welds shall be ground smooth, paint all seams.
3. Hardware: All fasteners shall be concealed. If exposed, hardware shall be tamper proof fasteners, corrosion resistant, and color matching adjacent surfaces.
4. All painted sign surfaces to receive UV/Anti-Graffiti spray coating. All sign surfaces with reflective graphics to receive 3M approved UV/Anti-Graffiti overlaminate.

ENVIRONMENTS & EXPERIENCES
merje
120 North Church Street
Suite 208
West Chester, PA 19380
T 484.266.0648
www.merjedesign.com

CLIENT / PROJECT
Lake Havasu City, AZ Wayfinding Program

PROJECT NO.

SUBCONSULTANT

DATE January 8, 2015

DRAWN BY: JC/PR

REVISIONS
February 10, 2015
August 2016

SHEET TITLE
VDIR.2A Vehicular Directional Double-Sided

SHEET NO.
C.5

These drawings are meant for DESIGN INTENT ONLY and are not for construction. Contractor shall verify and be responsible for all dimensions and conditions of the job. Contractor shall be familiar with the site and conditions it presents. This office must be notified of any variations from the dimensions and conditions shown on this drawing. Shop drawings and details must be submitted to this office for approval prior to proceeding with fabrication. All copy shall be proofread by client and legal requirements checked by legal department.

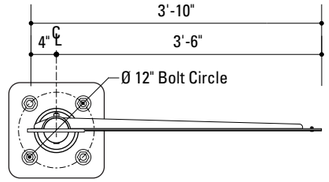

4 Top View: VDIR.3
SCALE: 1/2" = 1'-0"

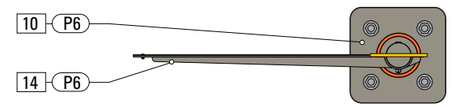

5 Top View: VDIR.3
SCALE: 1/2" = 1'-0"

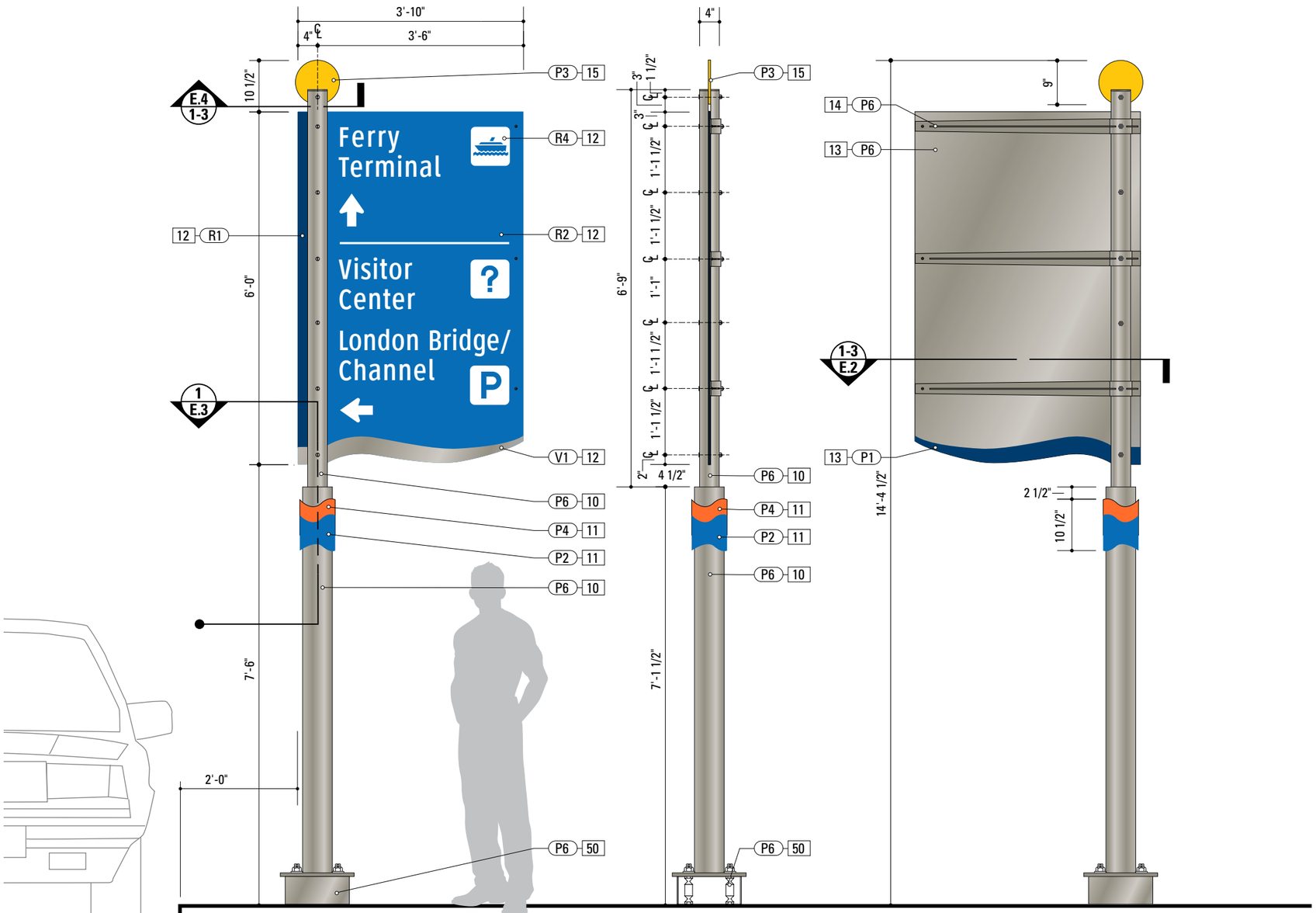

1 Front View: VDIR.3
SCALE: 1/2" = 1'-0"

2 Side View: VDIR.3
SCALE: 1/2" = 1'-0"

3 Rear View: VDIR.3
SCALE: 1/2" = 1'-0"

SPECIFICATIONS **SIGN TYPE:** VDIR.3 **FUNCTION:** Vehicular Directional

10. 3.5-to-5 POLE
LOWER POLE MATERIAL: Aluminum SCH 40 Pipe 6061T6 - 5 (5.563" OD x .258" wall)
UPPER POLE MATERIAL: Aluminum SCH 40 Pipe 6061T6 - 3.5 (4.00" OD x .226" wall)
FABRICATION PROCESS: Extruded, router cut
EDGES: Smooth
COLOR: Custom, as noted
SURFACE PROCESS: Paint all exposed surfaces with Matthews Acrylic Polyurethane, with clear coat satin finish.
FASTENERS: 3 internal gusset rings, with top cap, are stitch-weld and drilled with fill-welds.
BASE PLATE: 1/2" thk Aluminum sheet
FOOTER: Transpo® 5100 Pole-Safe break-away system, according to specifications per ADOT.

11. CLAMSHELL COLLAR
MATERIAL: Cast Aluminum
FABRICATION PROCESS: Custom cast clamshell
EDGES: Smooth
COLOR: Custom, as noted
SURFACE PROCESS: Paint all exposed surfaces with Matthews Acrylic Polyurethane, with clear coat satin finish.
FASTENER: Mechanically to pole with SS tamper-resistant fasteners.

12. SIGN PANEL - REFLECTIVE
MATERIAL: 1/8" thk Aluminum sheet
FABRICATION PROCESS: Router Cut
EDGES: Smooth
PANEL EDGES PROCESS: Paint all panel edges with Matthews Acrylic Polyurethane, with clear coat satin finish.
COLOR: Custom, as noted
GRAPHIC BACKGROUND AND COPY PROCESS: 3M custom inks print direct to 3930 with 3M approved UV/Graffiti Vinyl Over-laminate. (See Color Sheet for all color and material specifications)
FASTENER: Press-roll per 3M requirements. SS tamper-resistant hardware (Spanner bolt, expanded PTFE sealing washers, and Flex-Top expanding lock-nuts).

13. SIGN PANEL - BACK
COLOR: custom, as noted
SURFACE PROCESS: Paint all exposed surfaces with Matthews Acrylic Polyurethane, with clear coat satin finish.

14. SUPPORT ARM - SIGN PANEL
MATERIAL: 1/4" thk Aluminum sheet
FABRICATION PROCESS: Router Cut, Brake-formed
EDGES: Square, Smooth
COLOR: custom, as noted
SURFACE PROCESS: Paint all exposed surfaces with Matthews Acrylic Polyurethane, with clear coat satin finish.
FASTENER: Stitch-weld. SS tamper-resistant hardware (Spanner bolt, expanded PTFE sealing washers, and Flex-Top expanding lock-nuts).

15. DISC + TOP CAP
MATERIAL: 1/4" thk Aluminum sheet
FABRICATION PROCESS: Router Cut
EDGES: Smooth
COLOR: Custom, as noted.
SURFACE PROCESS: Paint all exposed surfaces with Matthews Acrylic Polyurethane, with clear coat satin finish.
FASTENER: Stitch-weld. SS tamper-resistant hardware (Spanner bolt, expanded PTFE sealing washers, and Flex-Top expanding lock-nuts).

50. BREAKAWAY SYSTEM
SYSTEM: The Transpo® Pole-Safe 5100 break-away system, according to specifications per ADOT.
SKIRT: The Transpo® Pole-Safe Skirt.

DESIGN NOTE:
Final design and shop drawings shall be supplied by the fabricator. An Arizona registered engineer is required to sign and seal the submittal of shop drawings.

NOTES
1. Fabricator shall verify the mounting conditions and provide a detail drawing for each mounting situation, prior to fabrication. Fabricator shall obtain approval from the Designer or Client for placement prior to fabrication.
2. Welds: All welds shall be ground smooth, paint all seams.
3. Hardware: All fasteners shall be concealed. If exposed, hardware shall be tamper proof fasteners, corrosion resistant, and color matching adjacent surfaces.
4. All painted sign surfaces to receive UV/Anti-Graffiti spray coating. All sign surfaces with reflective graphics to receive 3M approved UV/Anti-Graffiti overlaminate.

ENVIRONMENTS & EXPERIENCES
merje
120 North Church Street
Suite 208
West Chester, PA 19380
T 484.266.0648
www.merjedesign.com

CLIENT / PROJECT
Lake Havasu City, AZ Wayfinding Program

PROJECT NO.

SUBCONSULTANT

DATE January 8, 2015

DRAWN BY: JC/PR

REVISIONS
February 10, 2015
August 2016

SHEET TITLE
VDIR.3 Vehicular Directional

SHEET NO.
C.6

These drawings are meant for DESIGN INTENT ONLY and are not for construction. Contractor shall verify and be responsible for all dimensions and conditions of the job. Contractor shall be familiar with the site and conditions it presents. This office must be notified of any variations from the dimensions and conditions shown on this drawing. Shop drawings and details must be submitted to this office for approval prior to proceeding with fabrication. All copy shall be proofread by client and legal requirements checked by legal department.

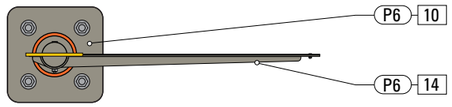

5 Top View: VDIR.3 LEFT
SCALE: 1/2" = 1'-0"

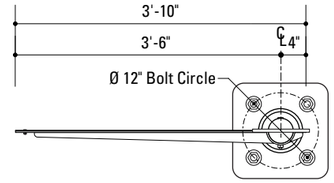

4 Top View: VDIR.3 LEFT
SCALE: 1/2" = 1'-0"

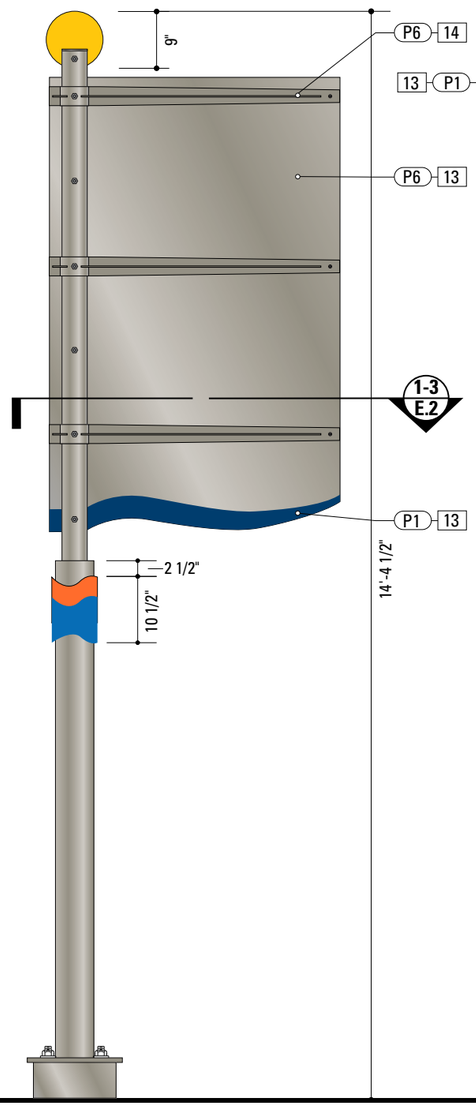

3 Rear View: VDIR.3 LEFT
SCALE: 1/2" = 1'-0"

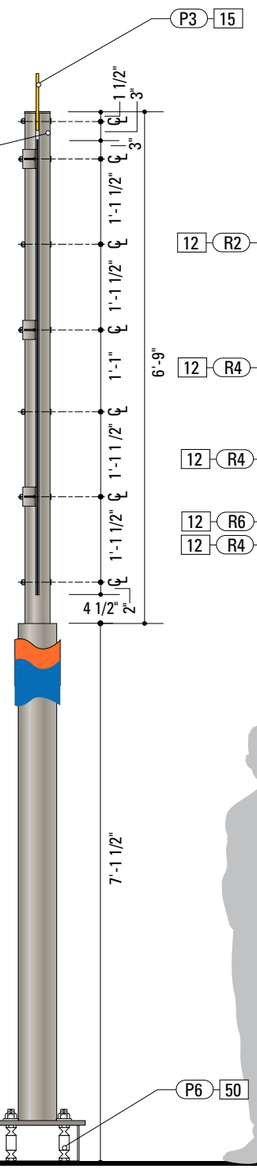

2 Side View: VDIR.3 LEFT
SCALE: 1/2" = 1'-0"

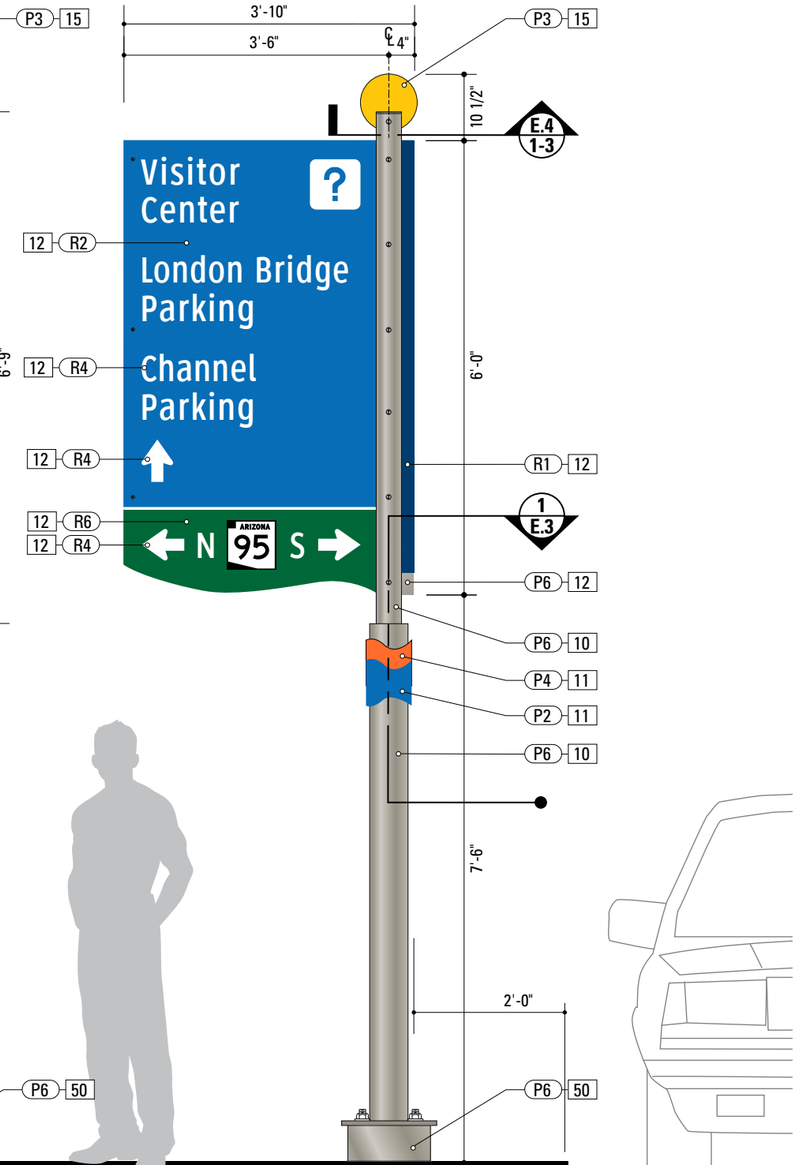

1 Front View: VDIR.3 LEFT
SCALE: 1/2" = 1'-0"

SPECIFICATIONS **SIGN TYPE:** VDIR.3_LEFT **FUNCTION:** Vehicular Directional

10. 3.5-to-5 POLE
LOWER POLE MATERIAL: Aluminum SCH 40 Pipe 6061T6 - 5 (5.563" OD x .258" wall)
UPPER POLE MATERIAL: Aluminum SCH 40 Pipe 6061T6 - 3.5 (4.00" OD x .226" wall)
FABRICATION PROCESS: Extruded, router cut
EDGES: Smooth
COLOR: Custom, as noted
SURFACE PROCESS: Paint all exposed surfaces with Matthews Acrylic Polyurethane, with clear coat satin finish.
FASTENERS: 3 internal gusset rings, with top cap, are stitch-weld and drilled with fill-welds.
BASE PLATE: 1/2" thk Aluminum sheet
FOOTER: Transpo® 5100 Pole-Safe break-away system, according to specifications per ADOT.

11. CLAMSHELL COLLAR
MATERIAL: Cast Aluminum
FABRICATION PROCESS: Custom cast clamshell
EDGES: Smooth
COLOR: Custom, as noted
SURFACE PROCESS: Paint all exposed surfaces with Matthews Acrylic Polyurethane, with clear coat satin finish.
FASTENER: Mechanically to pole with SS tamper-resistant fasteners.

12. SIGN PANEL - REFLECTIVE
MATERIAL: 1/8" thk Aluminum sheet
FABRICATION PROCESS: Router Cut
EDGES: Smooth
PANEL EDGES PROCESS: Paint all panel edges with Matthews Acrylic Polyurethane, with clear coat satin finish.
COLOR: Custom, as noted
GRAPHIC BACKGROUND AND COPY PROCESS: 3M custom inks print direct to 3930 with 3M approved UV/Graffiti Vinyl Over-laminate. (See Color Sheet for all color and material specifications)
FASTENER: Press-roll per 3M requirements. SS tamper-resistant hardware (Spanner bolt, expanded PTFE sealing washers, and Flex-Top expanding lock-nuts).

13. SIGN PANEL - BACK
COLOR: custom, as noted
SURFACE PROCESS: Paint all exposed surfaces with Matthews Acrylic Polyurethane, with clear coat satin finish.

14. SUPPORT ARM - SIGN PANEL
MATERIAL: 1/4" thk Aluminum sheet
FABRICATION PROCESS: Router Cut, Brake-formed
EDGES: Square, Smooth
COLOR: custom, as noted
SURFACE PROCESS: Paint all exposed surfaces with Matthews Acrylic Polyurethane, with clear coat satin finish.
FASTENER: Stitch-weld. SS tamper-resistant hardware (Spanner bolt, expanded PTFE sealing washers, and Flex-Top expanding lock-nuts).

15. DISC + TOP CAP
MATERIAL: 1/4" thk Aluminum sheet
FABRICATION PROCESS: Router Cut
EDGES: Smooth
COLOR: Custom, as noted.
SURFACE PROCESS: Paint all exposed surfaces with Matthews Acrylic Polyurethane, with clear coat satin finish.
FASTENER: Stitch-weld. SS tamper-resistant hardware (Spanner bolt, expanded PTFE sealing washers, and Flex-Top expanding lock-nuts).

50. BREAKAWAY SYSTEM
SYSTEM: The Transpo® Pole-Safe 5100 break-away system, according to specifications per ADOT.
SKIRT: The Transpo® Pole-Safe Skirt.

DESIGN NOTE:
Final design and shop drawings shall be supplied by the fabricator. An Arizona registered engineer is required to sign and seal the submittal of shop drawings.

NOTES
1. Fabricator shall verify the mounting conditions and provide a detail drawing for each mounting situation, prior to fabrication. Fabricator shall obtain approval from the Designer or Client for placement prior to fabrication.
2. Welds: All welds shall be ground smooth, paint all seams.
3. Hardware: All fasteners shall be concealed. If exposed, hardware shall be tamper proof fasteners, corrosion resistant, and color matching adjacent surfaces.
4. All painted sign surfaces to receive UV/Anti-Graffiti spray coating. All sign surfaces with reflective graphics to receive 3M approved UV/Anti-Graffiti overlaminate.

ENVIRONMENTS & EXPERIENCES
merje
120 North Church Street
Suite 208
West Chester, PA 19380
T 484.266.0648
www.merjedesign.com

CLIENT / PROJECT
Lake Havasu City, AZ Wayfinding Program

PROJECT NO.

SUBCONSULTANT

DATE January 8, 2015

DRAWN BY: JC/PR

REVISIONS
February 10, 2015
August 2016

SHEET TITLE
VDIR.3_LEFT Vehicular Directional

SHEET NO.
C.7

These drawings are meant for DESIGN INTENT ONLY and are not for construction. Contractor shall verify and be responsible for all dimensions and conditions of the job. Contractor shall be familiar with the site and conditions it presents. This office must be notified of any variations from the dimensions and conditions shown on this drawing. Shop drawings and details must be submitted to this office for approval prior to proceeding with fabrication. All copy shall be proofread by client and legal requirements checked by legal department.

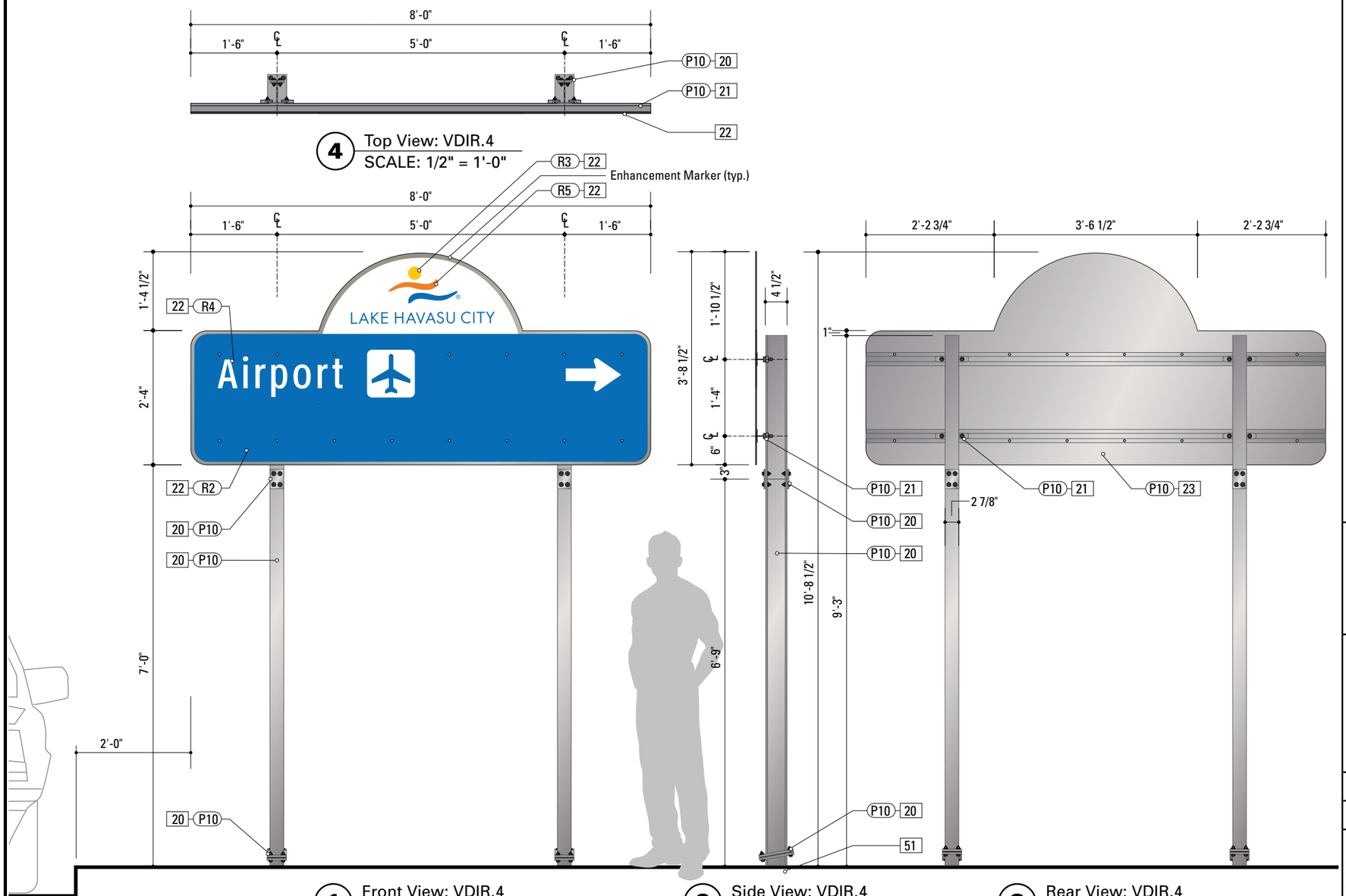

SPECIFICATIONS **SIGN TYPE:** VDIR.4 **FUNCTION:** Vehicular Directional

20. ADOT 4.5x3 I-BEAM
MATERIAL: 4.5" x 2.875" x .250" flange Aluminum I-Beam
FABRICATION PROCESS: Extruded
EDGES: Smooth
SURFACE PROCESS: Galvanized
HINGE: Reference ADOT drawing no. S-6, on sheet E.14 of this drawing document.
BREAKAWAY + FOOTER: Reference ADOT drawing no. S-6, on sheet E.14 of this drawing document.
FASTENERS: Reference ADOT drawing no. S-6, on sheet E.14 of this drawing document.

21. ADOT "T" BACK BRACE
MATERIAL: Aluminum T-Section Back Brace
FABRICATION PROCESS: Extruded
EDGES: Smooth
SURFACE PROCESS: Galvanized
T BACK BRACE: Reference ADOT drawing no. S-8, on sheet E.16 of this drawing document.
CLAMP: Reference ADOT drawing no. S-7, on sheet E.15 of this drawing document.

22. ADOT SIGN PANEL - REFLECTIVE
MATERIAL: 1/8" thk Aluminum sheet
FABRICATION PROCESS: Router Cut
EDGES: Smooth
COLOR: Custom, as noted
GRAPHIC BACKGROUND AND COPY PROCESS: 3M custom inks print direct to 3930 with 3M approved UV/Graffiti Vinyl Over-laminate. (See Color Sheet for all color and material specifications)
FASTENER: Press-roll per 3M requirements. Attach sign panel to T Back Brace with rivets. Reference ADOT drawing no. S-8, on sheet E.16 of this drawing document, for proper spacing.

23. ADOT SIGN PANEL - BACK
SURFACE PROCESS: Galvanized

51. BREAKAWAY SYSTEM
SYSTEM: The ADOT standard Break-Away S4x7.7 system.

DESIGN NOTE:
Final design and shop drawings shall be supplied by the fabricator. An Arizona registered engineer is required to sign and seal the submittal of shop drawings.

NOTES
1. Fabricator shall verify the mounting conditions and provide a detail drawing for each mounting situation, prior to fabrication. Fabricator shall obtain approval from the Designer or Client for placement prior to fabrication.
2. Welds: All welds shall be ground smooth, paint all seams.
3. Hardware: All fasteners shall be concealed. If exposed, hardware shall be tamper proof fasteners, corrosion resistant, and color matching adjacent surfaces.
4. All painted sign surfaces to receive UV/Anti-Graffiti spray coating. All sign surfaces with reflective graphics to receive 3M approved UV/Anti-Graffiti overlaminate.

ENVIRONMENTS & EXPERIENCES
merje
120 North Church Street
Suite 208
West Chester, PA 19380
T 484.266.0648
www.merjedesign.com

CLIENT / PROJECT
Lake Havasu City, AZ Wayfinding Program

PROJECT NO.

SUBCONSULTANT

DATE January 8, 2015
DRAWN BY: JC/PR

REVISIONS
February 10, 2015
August 2016

SHEET TITLE
VDIR.4 Vehicular Directional

SHEET NO.
C.8

These drawings are meant for DESIGN INTENT ONLY and are not for construction. Contractor shall verify and be responsible for all dimensions and conditions of the job. Contractor shall be familiar with the site and conditions it presents. This office must be notified of any variations from the dimensions and conditions shown on this drawing. Shop drawings and details must be submitted to this office for approval prior to proceeding with fabrication. All copy shall be proofread by client and legal requirements checked by legal department.

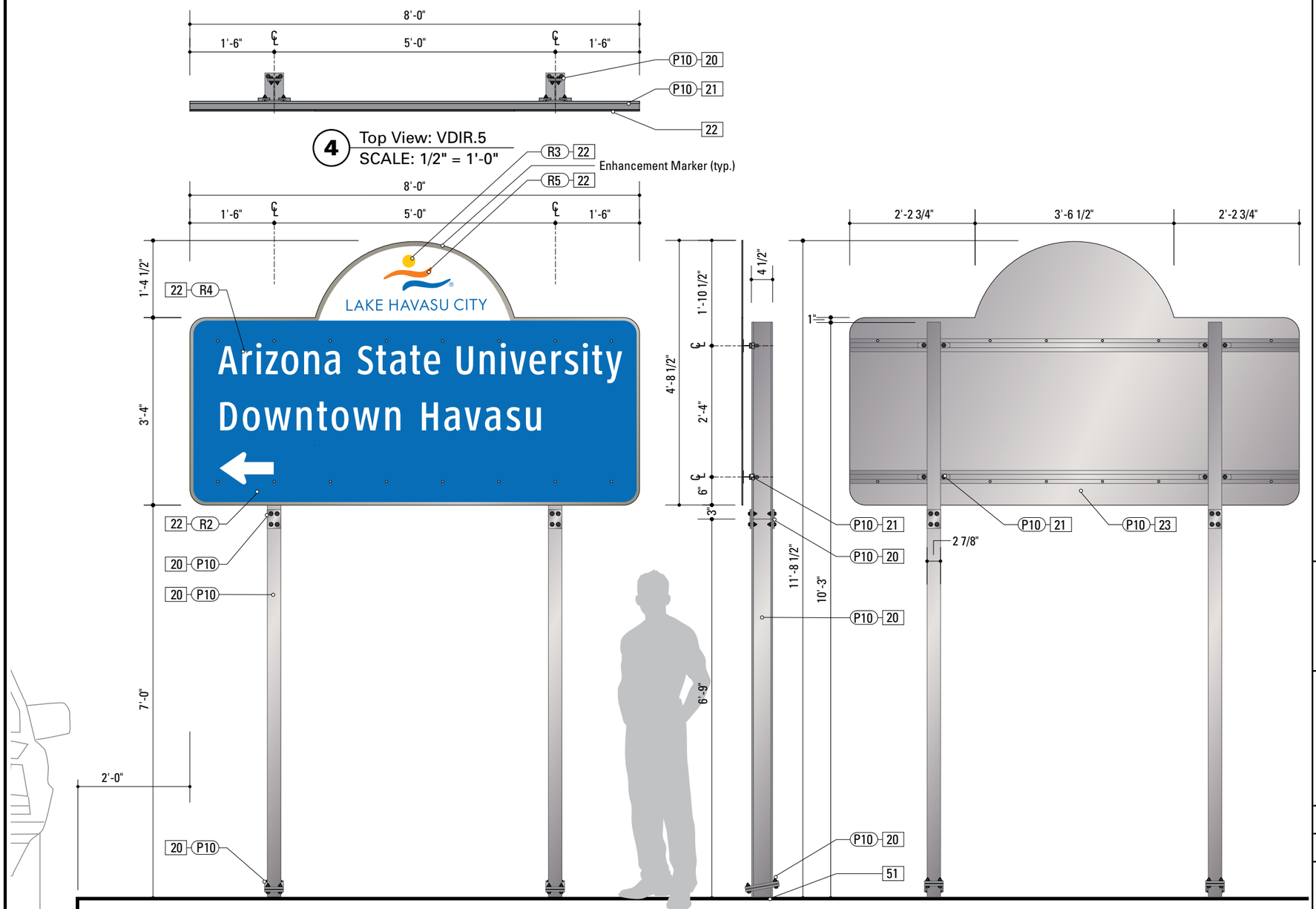

SPECIFICATIONS **SIGN TYPE:** VDIR.5 **FUNCTION:** Vehicular Directional

20. ADOT 4.5x3 I-BEAM
MATERIAL: 4.5" x 2.875" x .250" flange
Aluminum I-Beam
FABRICATION PROCESS: Extruded
EDGES: Smooth
SURFACE PROCESS: Galvanized
HINGE: Reference ADOT drawing no. S-6, on sheet E.14 of this drawing document.
BREAKAWAY + FOOTER: Reference ADOT drawing no. S-6, on sheet E.14 of this drawing document.
FASTENERS: Reference ADOT drawing no. S-6, on sheet E.14 of this drawing document.

21. ADOT "T" BACK BRACE
MATERIAL: Aluminum T-Section Back Brace
FABRICATION PROCESS: Extruded
EDGES: Smooth
SURFACE PROCESS: Galvanized
T BACK BRACE: Reference ADOT drawing no. S-8, on sheet E.16 of this drawing document.
CLAMP: Reference ADOT drawing no. S-7, on sheet E.15 of this drawing document.

22. ADOT SIGN PANEL - REFLECTIVE
MATERIAL: 1/8" thk Aluminum sheet
FABRICATION PROCESS: Router Cut
EDGES: Smooth
COLOR: Custom, as noted
GRAPHIC BACKGROUND AND COPY PROCESS: 3M custom inks print direct to 3930 with 3M approved UV/Graffiti Vinyl Over-laminate. (See Color Sheet for all color and material specifications)
FASTENER: Press-roll per 3M requirements. Attach sign panel to T Back Brace with rivets. Reference ADOT drawing no. S-8, on sheet E.16 of this drawing document, for proper spacing.

23. ADOT SIGN PANEL - BACK
SURFACE PROCESS: Galvanized

51. BREAKAWAY SYSTEM
SYSTEM: The ADOT standard Break-Away S4x7.7 system.

DESIGN NOTE:
Final design and shop drawings shall be supplied by the fabricator. An Arizona registered engineer is required to sign and seal the submittal of shop drawings.

NOTES
1. Fabricator shall verify the mounting conditions and provide a detail drawing for each mounting situation, prior to fabrication. Fabricator shall obtain approval from the Designer or Client for placement prior to fabrication.
2. Welds: All welds shall be ground smooth, paint all seams.
3. Hardware: All fasteners shall be concealed. If exposed, hardware shall be tamper proof fasteners, corrosion resistant, and color matching adjacent surfaces.
4. All painted sign surfaces to receive UV/Anti-Graffiti spray coating. All sign surfaces with reflective graphics to receive 3M approved UV/Anti-Graffiti overlaminate.

ENVIRONMENTS & EXPERIENCES
merje
120 North Church Street
Suite 208
West Chester, PA 19380
T 484.266.0648
www.merjedesign.com

CLIENT / PROJECT
Lake Havasu City, AZ Wayfinding Program

PROJECT NO.

SUBCONSULTANT

DATE January 8, 2015

DRAWN BY: JC/PR

REVISIONS
February 10, 2015
August 2016

SHEET TITLE
VDIR.5 Vehicular Directional

SHEET NO.
C.9

These drawings are meant for DESIGN INTENT ONLY and are not for construction. Contractor shall verify and be responsible for all dimensions and conditions of the job. Contractor shall be familiar with the site and conditions it presents. This office must be notified of any variations from the dimensions and conditions shown on this drawing. Shop drawings and details must be submitted to this office for approval prior to proceeding with fabrication. All copy shall be proofread by client and legal requirements checked by legal department.

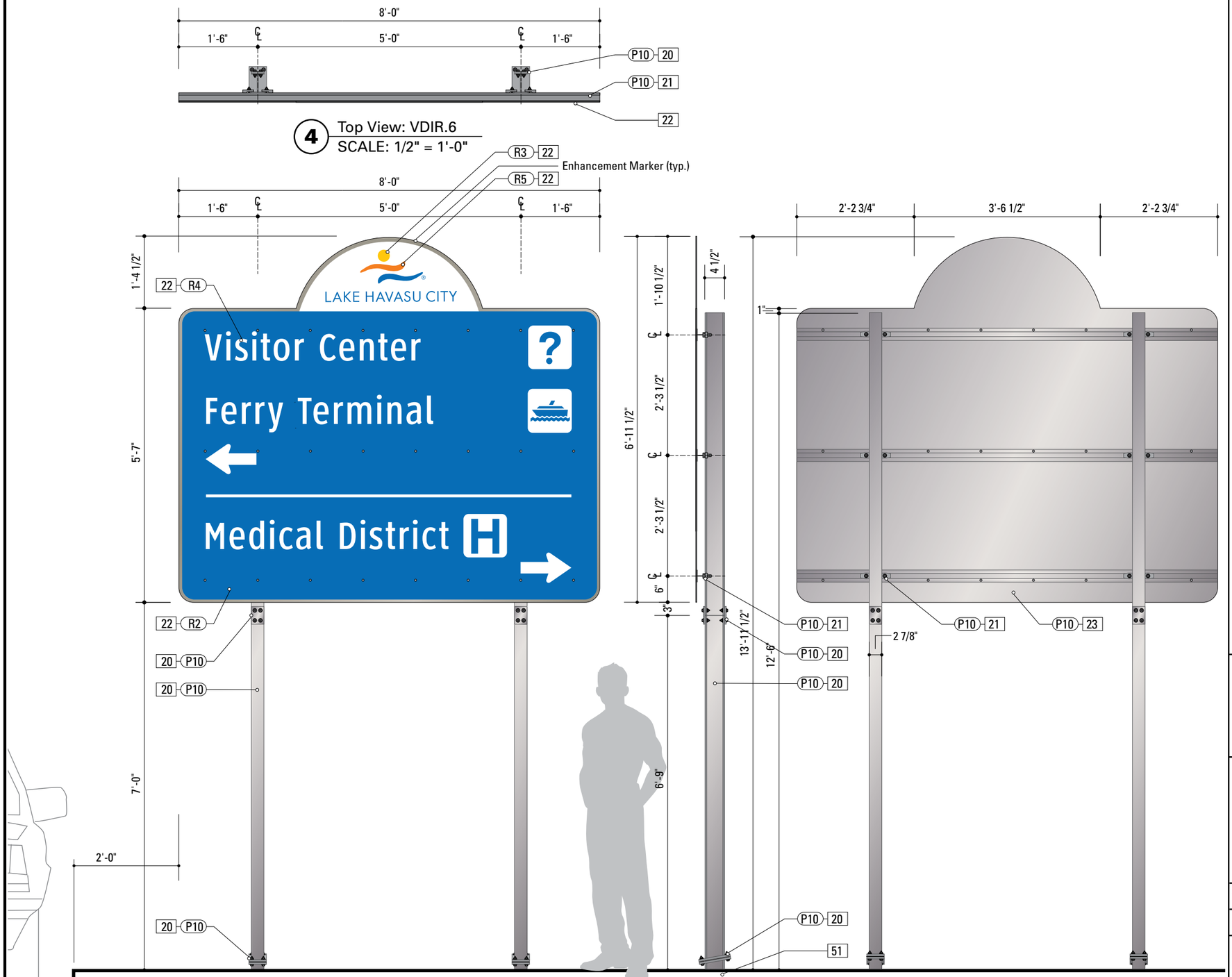

SPECIFICATIONS **SIGN TYPE:** VDIR.6 **FUNCTION:** Vehicular Directional

20. ADOT 4.5x3 I-BEAM
MATERIAL: 4.5" x 2.875" x .250" flange Aluminum I-Beam
FABRICATION PROCESS: Extruded
EDGES: Smooth
SURFACE PROCESS: Galvanized
HINGE: Reference ADOT drawing no. S-6, on sheet E.14 of this drawing document.
BREAKAWAY + FOOTER: Reference ADOT drawing no. S-6, on sheet E.14 of this drawing document.
FASTENERS: Reference ADOT drawing no. S-6, on sheet E.14 of this drawing document.

21. ADOT "T" BACK BRACE
MATERIAL: Aluminum T-Section Back Brace
FABRICATION PROCESS: Extruded
EDGES: Smooth
SURFACE PROCESS: Galvanized
T BACK BRACE: Reference ADOT drawing no. S-8, on sheet E.16 of this drawing document.
CLAMP: Reference ADOT drawing no. S-7, on sheet E.15 of this drawing document.

22. ADOT SIGN PANEL - REFLECTIVE
MATERIAL: 1/8" thk Aluminum sheet
FABRICATION PROCESS: Router Cut
EDGES: Smooth
COLOR: Custom, as noted
GRAPHIC BACKGROUND AND COPY PROCESS: 3M custom inks print direct to 3930 with 3M approved UV/Graffiti Vinyl Over-laminate. (See Color Sheet for all color and material specifications)
FASTENER: Press-roll per 3M requirements. Attach sign panel to T Back Brace with rivets. Reference ADOT drawing no. S-8, on sheet E.16 of this drawing document, for proper spacing.

23. ADOT SIGN PANEL - BACK
SURFACE PROCESS: Galvanized

51. BREAKAWAY SYSTEM
SYSTEM: The ADOT standard Break-Away S4x7.7 system.

DESIGN NOTE:
Final design and shop drawings shall be supplied by the fabricator. An Arizona registered engineer is required to sign and seal the submittal of shop drawings.

NOTES
1. Fabricator shall verify the mounting conditions and provide a detail drawing for each mounting situation, prior to fabrication. Fabricator shall obtain approval from the Designer or Client for placement prior to fabrication.
2. Welds: All welds shall be ground smooth, paint all seams.
3. Hardware: All fasteners shall be concealed. If exposed, hardware shall be tamper proof fasteners, corrosion resistant, and color matching adjacent surfaces.
4. All painted sign surfaces to receive UV/Anti-Graffiti spray coating. All sign surfaces with reflective graphics to receive 3M approved UV/Anti-Graffiti overlaminate.

ENVIRONMENTS & EXPERIENCES
merje
120 North Church Street
Suite 208
West Chester, PA 19380
T 484.266.0648
www.merjedesign.com

CLIENT / PROJECT
Lake Havasu City, AZ Wayfinding Program

PROJECT NO.

SUBCONSULTANT

DATE January 8, 2015

DRAWN BY: JC/PR

REVISIONS
February 10, 2015
August 2016

SHEET TITLE
VDIR.6 Vehicular Directional

SHEET NO.
C.10

These drawings are meant for DESIGN INTENT ONLY and are not for construction. Contractor shall verify and be responsible for all dimensions and conditions of the job. Contractor shall be familiar with the site and conditions it presents. This office must be notified of any variations from the dimensions and conditions shown on this drawing. Shop drawings and details must be submitted to this office for approval prior to proceeding with fabrication. All copy shall be proofread by client and legal requirements checked by legal department.

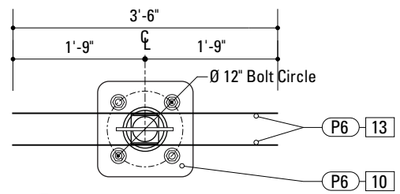

4 Top View: DEST.1
SCALE: 1/2" = 1'-0"

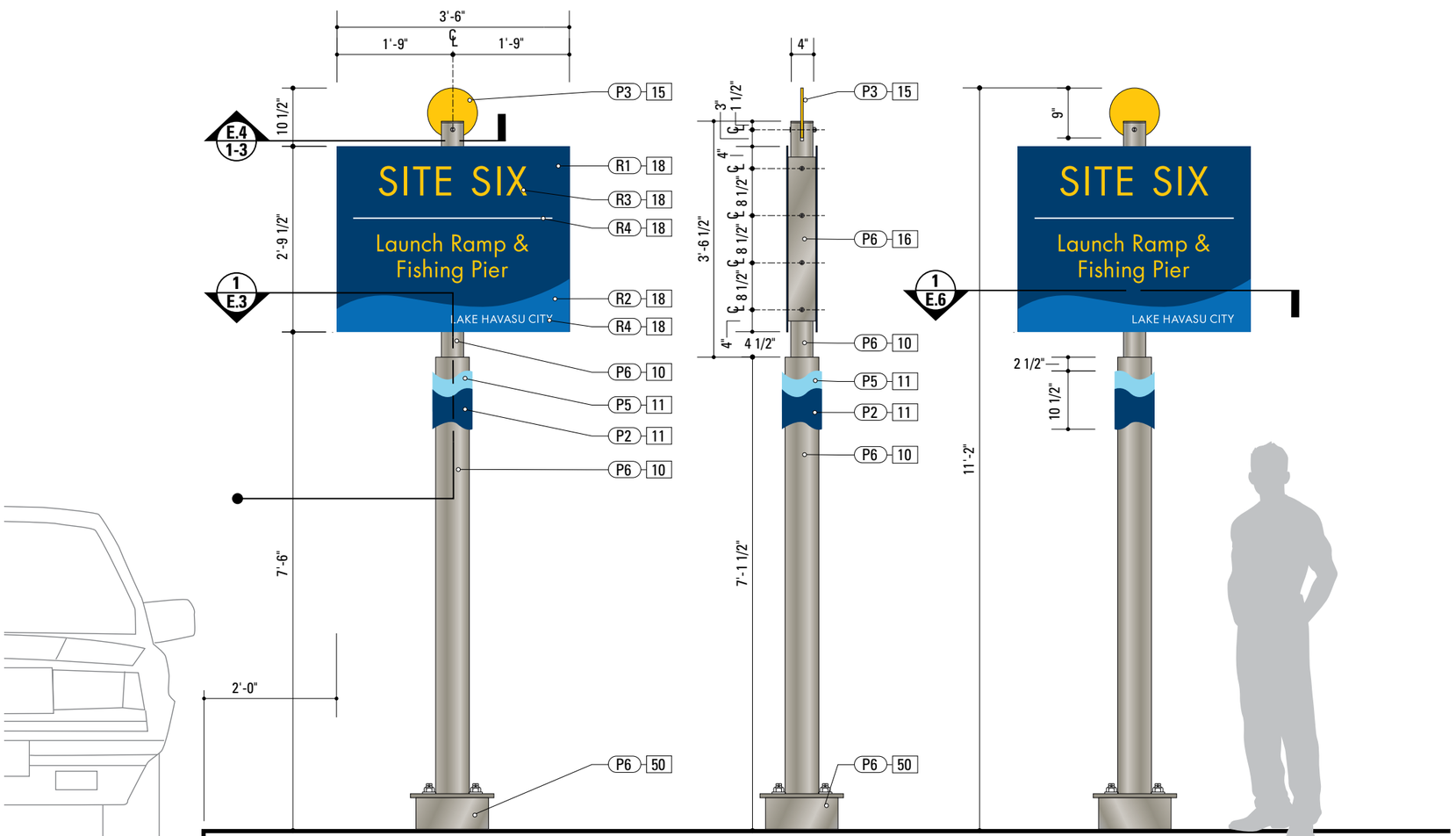

1 Front View: DEST.1
SCALE: 1/2" = 1'-0"

2 Side View: DEST.1
SCALE: 1/2" = 1'-0"

3 Rear View: DEST.1
SCALE: 1/2" = 1'-0"

SPECIFICATIONS **SIGN TYPE:** DEST.1 **FUNCTION:** Destination ID

10. 3.5-to-5 POLE
LOWER POLE MATERIAL: Aluminum SCH 40 Pipe 6061T6 - 5 (5.563" OD x .258" wall)
UPPER POLE MATERIAL: Aluminum SCH 40 Pipe 6061T6 - 3.5 (4.00" OD x .226" wall)
FABRICATION PROCESS: Extruded, router cut
EDGES: Smooth
COLOR: Custom, as noted
SURFACE PROCESS: Paint all exposed surfaces with Matthews Acrylic Polyurethane, with clear coat satin finish.
FASTENERS: 3 internal gusset rings, with top cap, are stitch-weld and drilled with fill-welds.
BASE PLATE: 1/2" thk Aluminum sheet
FOOTER: Transpo® 5100 Pole-Safe break-away system, according to specifications per ADOT.

11. CLAMSHELL COLLAR
MATERIAL: Cast Aluminum
FABRICATION PROCESS: Custom cast clamshell
EDGES: Smooth
COLOR: Custom, as noted
SURFACE PROCESS: Paint all exposed surfaces with Matthews Acrylic Polyurethane, with clear coat satin finish.
FASTENER: Mechanically to pole with SS tamper-resistant fasteners.

13. SIGN PANEL - BACK
COLOR: custom, as noted
SURFACE PROCESS: Paint all exposed surfaces with Matthews Acrylic Polyurethane, with clear coat satin finish.

15. DISC + TOP CAP
MATERIAL: 1/4" thk Aluminum sheet
FABRICATION PROCESS: Router Cut
EDGES: Smooth
COLOR: Custom, as noted.
SURFACE PROCESS: Paint all exposed surfaces with Matthews Acrylic Polyurethane, with clear coat satin finish.
FASTENER: Stitch-weld. SS tamper-resistant hardware (Spanner bolt, expanded PTFE sealing washers, and Flex-Top expanding lock-nuts).

16. POST + PANEL BRACKET
MATERIAL: 1/8" thick Aluminum sheet
FABRICATION PROCESS: Router Cut, Brake-formed
EDGES: Square, Smooth
COLOR: custom, as noted
SURFACE PROCESS: Paint all exposed surfaces with Matthews Acrylic Polyurethane, with clear coat satin finish.
FASTENER: Stitch-weld to each sign panel. SS tamper-resistant hardware (Spanner bolt, expanded PTFE sealing washers, and Flex-Top expanding lock-nuts).

18. 1/4" SIGN PANEL - REFLECTIVE
MATERIAL: 1/4" thk Aluminum sheet
FABRICATION PROCESS: Router Cut
EDGES: Smooth
PANEL EDGES PROCESS: Paint all panel edges with Matthews Acrylic Polyurethane, with clear coat satin finish.
COLOR: Custom, as noted
GRAPHIC BACKGROUND AND COPY PROCESS: 3M custom inks print direct to 3930 with 3M approved UV/Graffiti Vinyl Over-laminate. (See Color Sheet for all color and material specifications)
FASTENER: Press-roll per 3M requirements. SS tamper-resistant hardware (Spanner bolt, expanded PTFE sealing washers, and Flex-Top expanding lock-nuts).

50. BREAKAWAY FOOTER
FOOTER: The Transpo® Pole-Safe 5100 break-away system, according to specifications per ADOT.

DESIGN NOTE:
Final design and shop drawings shall be supplied by the fabricator. An Arizona registered engineer is required to sign and seal the submittal of shop drawings.

NOTES
1. Fabricator shall verify the mounting conditions and provide a detail drawing for each mounting situation, prior to fabrication. Fabricator shall obtain approval from the Designer or Client for placement prior to fabrication.
2. Welds: All welds shall be ground smooth, paint all seams.
3. Hardware: All fasteners shall be concealed. If exposed, hardware shall be tamper proof fasteners, corrosion resistant, and color matching adjacent surfaces.
4. All painted sign surfaces to receive UV/Anti-Graffiti spray coating. All sign surfaces with reflective graphics to receive 3M approved UV/Anti-Graffiti overlaminate.

ENVIRONMENTS & EXPERIENCES
merje
120 North Church Street
Suite 208
West Chester, PA 19380
T 484.266.0648
www.merjedesign.com

CLIENT / PROJECT
Lake Havasu City, AZ Wayfinding Program

PROJECT NO.

SUBCONSULTANT

DATE January 8, 2015

DRAWN BY: JC/PR

REVISIONS
February 10, 2015
August 2016

SHEET TITLE
DEST.1 Destination ID

SHEET NO.
C.11

These drawings are meant for DESIGN INTENT ONLY and are not for construction. Contractor shall verify and be responsible for all dimensions and conditions of the job. Contractor shall be familiar with the site and conditions it presents. This office must be notified of any variations from the dimensions and conditions shown on this drawing. Shop drawings and details must be submitted to this office for approval prior to proceeding with fabrication. All copy shall be proofread by client and legal requirements checked by legal department.

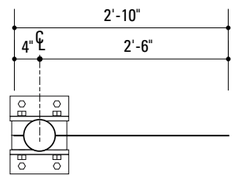

4 Top View: RESIDENT.1
SCALE: 1/2" = 1'-0"

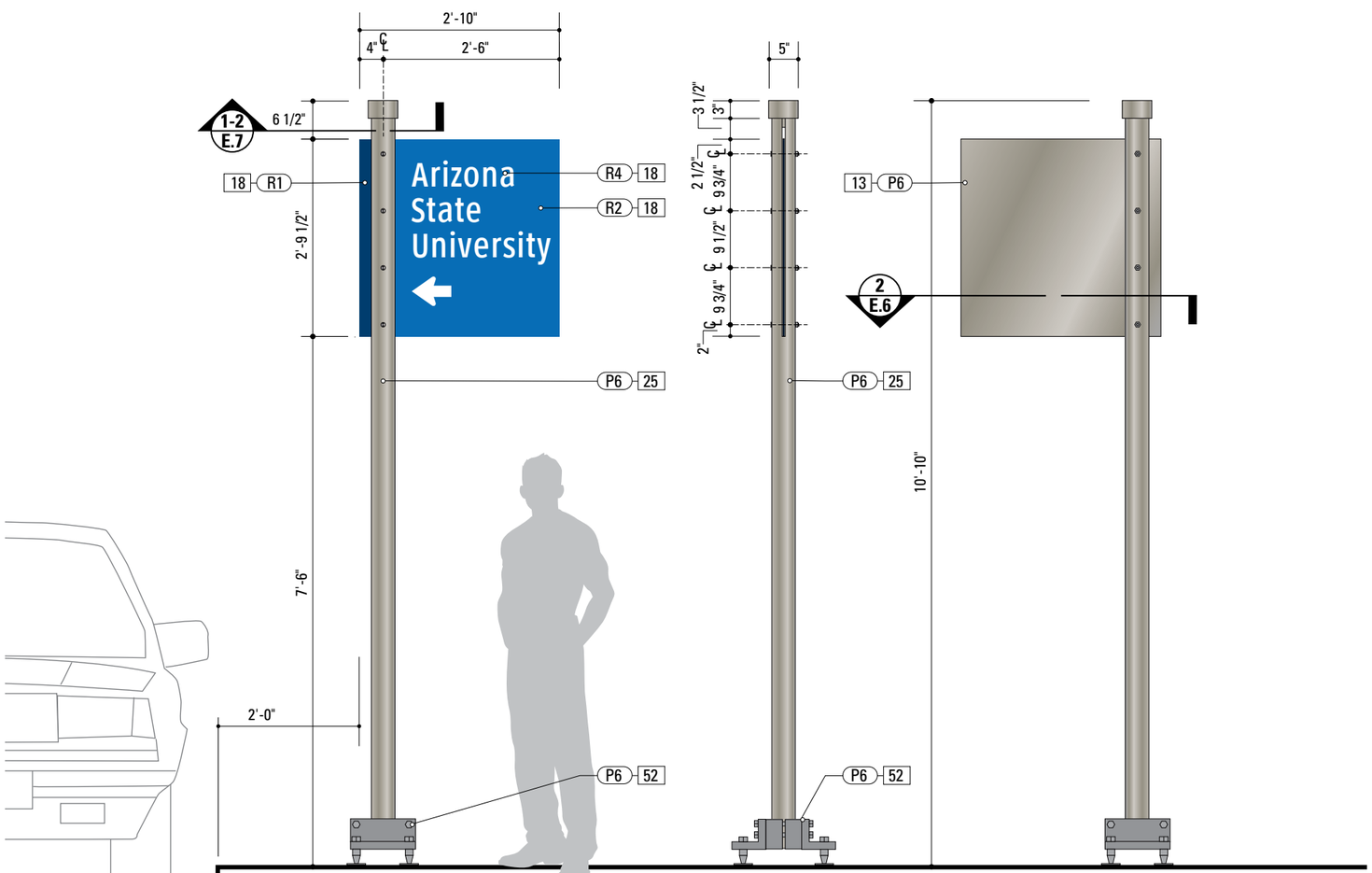

1 Front View: RESIDENT.1
SCALE: 1/2" = 1'-0"

2 Side View: RESIDENT.1
SCALE: 1/2" = 1'-0"

3 Rear View: RESIDENT.1
SCALE: 1/2" = 1'-0"

SPECIFICATIONS **SIGN TYPE:** RESIDENT.1 **FUNCTION:** Residential Directional

13. SIGN PANEL - BACK
COLOR: custom, as noted
SURFACE PROCESS: Paint all exposed surfaces with Matthews Acrylic Polyurethane, with clear coat satin finish.

18. 1/4" SIGN PANEL - REFLECTIVE
MATERIAL: 1/4" thk Aluminum sheet
FABRICATION PROCESS: Router Cut
EDGES: Smooth
PANEL EDGES PROCESS: Paint all panel edges with Matthews Acrylic Polyurethane, with clear coat satin finish.
COLOR: Custom, as noted
GRAPHIC BACKGROUND AND COPY PROCESS: 3M custom inks print direct to 3930 with 3M approved UV/Graffiti Vinyl Over-laminate. (See Color Sheet for all color and material specifications)
FASTENER: Press-roll per 3M requirements. SS tamper-resistant hardware (Spanner bolt, expanded PTFE sealing washers, and Flex-Top expanding lock-nuts).

25. 3.5 POLE
MATERIAL: Aluminum SCH 40 Pipe 6061T6 - 3.5 (4.00" OD x .226" wall)
FABRICATION PROCESS: Extruded
EDGES: Smooth
COLOR: Custom, as noted
SURFACE PROCESS: Paint all exposed surfaces with Matthews Acrylic Polyurethane, with clear coat satin finish.
FOOTER: Transpo® AP4 Break-Safe break-away system, according to specifications per ADOT.

52. BREAKAWAY FOOTER
FOOTER: The Transpo® Break-Safe AP4 break-away system, according to specifications per ADOT.

DESIGN NOTE:
Final design and shop drawings shall be supplied by the fabricator. An Arizona registered engineer is required to sign and seal the submittal of shop drawings.

NOTES
1. Fabricator shall verify the mounting conditions and provide a detail drawing for each mounting situation, prior to fabrication. Fabricator shall obtain approval from the Designer or Client for placement prior to fabrication.
2. Welds: All welds shall be ground smooth, paint all seams.
3. Hardware: All fasteners shall be concealed. If exposed, hardware shall be tamper proof fasteners, corrosion resistant, and color matching adjacent surfaces.
4. All painted sign surfaces to receive UV/Anti-Graffiti spray coating. All sign surfaces with reflective graphics to receive 3M approved UV/Anti-Graffiti overlaminate.

ENVIRONMENTS & EXPERIENCES
merje
120 North Church Street
Suite 208
West Chester, PA 19380
T 484.266.0648
www.merjedesign.com

CLIENT / PROJECT
Lake Havasu City, AZ Wayfinding Program

PROJECT NO.

SUBCONSULTANT

DATE January 8, 2015

DRAWN BY: JC/PR

REVISIONS
February 10, 2015
August 2016

SHEET TITLE
RESIDENT.1 Residential Directional

SHEET NO.
C.12

These drawings are meant for DESIGN INTENT ONLY and are not for construction. Contractor shall verify and be responsible for all dimensions and conditions of the job. Contractor shall be familiar with the site and conditions it presents. This office must be notified of any variations from the dimensions and conditions shown on this drawing. Shop drawings and details must be submitted to this office for approval prior to proceeding with fabrication. All copy shall be proofread by client and legal requirements checked by legal department.

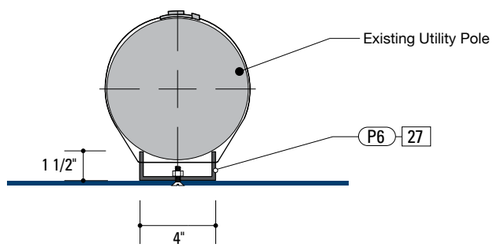

4 Top View: PARK.1A
SCALE: 1 1/2"=1'-0"

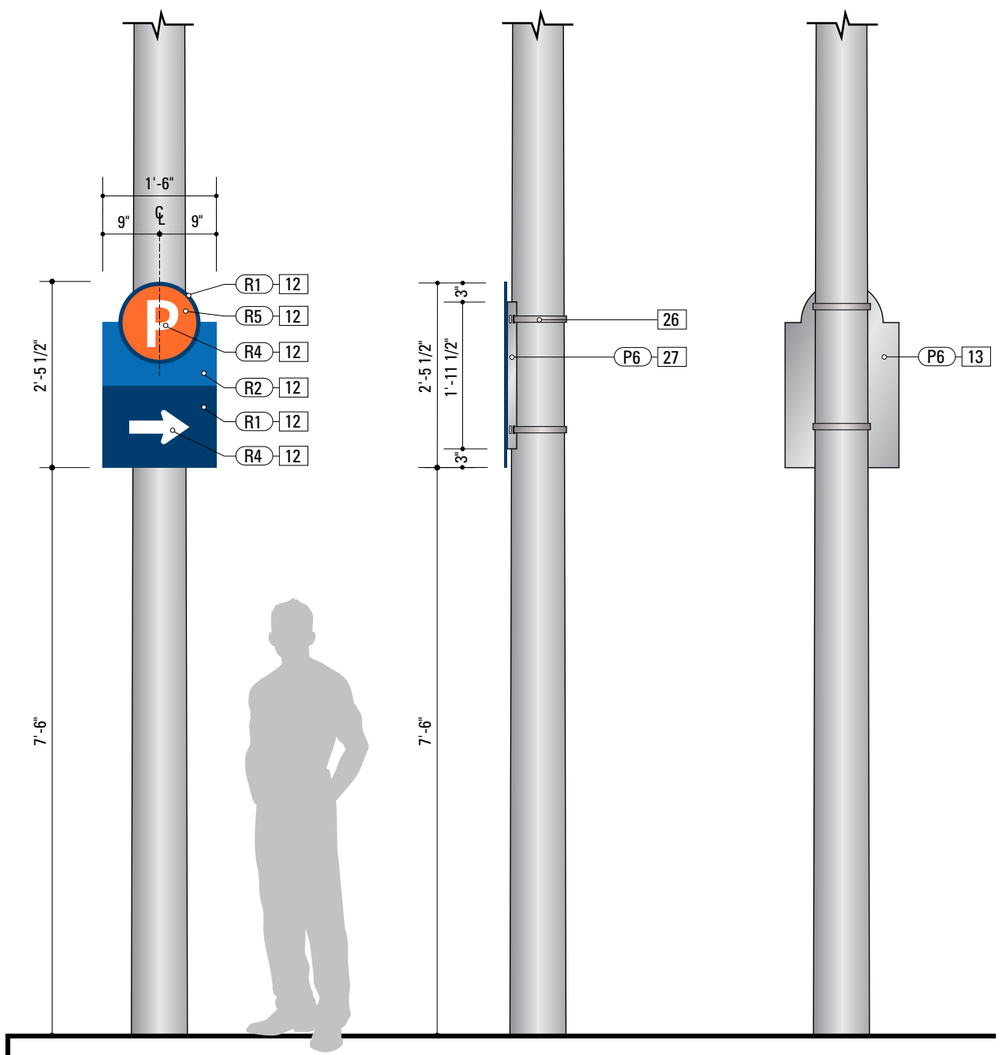

1 Front View: PARK.1A
SCALE: 1/2" = 1'-0"

2 Side View: PARK.1A
SCALE: 1/2" = 1'-0"

3 Back View: PARK.1A
SCALE: 1/2" = 1'-0"

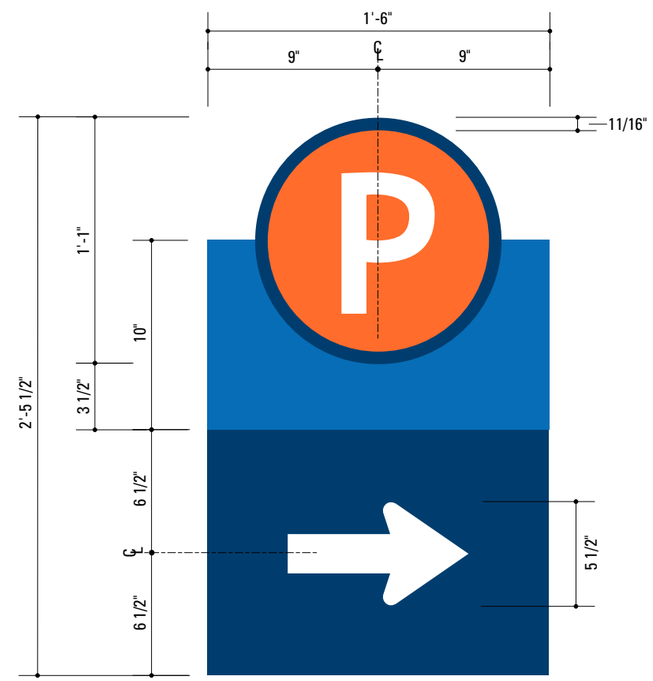

5 Graphic Layout: PARK.1A
SCALE: 1 1/2" = 1'-0"

SPECIFICATIONS **SIGN TYPE:** PARK.1A **FUNCTION:** Parking Trailblazer

12. SIGN PANEL - REFLECTIVE
MATERIAL: 1/8" thk Aluminum sheet
FABRICATION PROCESS: Router Cut
EDGES: Smooth
PANEL EDGES PROCESS: Paint all panel edges with Matthews Acrylic Polyurethane, with clear coat satin finish.
COLOR: Custom, as noted
GRAPHIC BACKGROUND AND COPY PROCESS: 3M custom inks print direct to 3930 with 3M approved UV/Graffiti Vinyl Over-laminate. (See Color Sheet for all color and material specifications)
FASTENER: Press-roll per 3M requirements. SS tamper-resistant hardware (Spanner bolt, expanded PTFE sealing washers, and Flex-Top expanding lock-nuts).

13. SIGN PANEL - BACK
COLOR: custom, as noted
SURFACE PROCESS: Paint all exposed surfaces with Matthews Acrylic Polyurethane, with clear coat satin finish.

26. POLE STRAP ATTACHMENT
PRODUCT: Band-It Band, or approved equal.
MATERIAL: Type 201 SS
SIZE: 3/4 inch
FINISH: Stainless Steel
FASTENER: Ultra-Lok® Free End clamps
NOTE: Sign Contractor to coordinate the removal or movement of interfering existing signs on utility poles, with the city.

27. BRACKET
MATERIAL: 1/8" thick Aluminum U-channel
FABRICATION PROCESS: Extruded
EDGES: Square, Smooth
COLOR: custom, as noted
SURFACE PROCESS: Paint all exposed surfaces with Matthews Acrylic Polyurethane, with clear coat satin finish.
FASTENER: Tamper-resistant mechanically fastened to Sign Panel. SS strap-mounted to utility pole.

DESIGN NOTE:
Final design and shop drawings shall be supplied by the fabricator. An Arizona registered engineer is required to sign and seal the submittal of shop drawings.

NOTES
1. Fabricator shall verify the mounting conditions and provide a detail drawing for each mounting situation, prior to fabrication. Fabricator shall obtain approval from the Designer or Client for placement prior to fabrication.
2. Welds: All welds shall be ground smooth, paint all seams.
3. Hardware: All fasteners shall be concealed. If exposed, hardware shall be tamper proof fasteners, corrosion resistant, and color matching adjacent surfaces.
4. All painted sign surfaces to receive UV/Anti-Graffiti spray coating. All sign surfaces with reflective graphics to receive 3M approved UV/Anti-Graffiti overlaminate.

ENVIRONMENTS & EXPERIENCES
merje
120 North Church Street
Suite 208
West Chester, PA 19380
T 484.266.0648
www.merjedesign.com

CLIENT / PROJECT
Lake Havasu City, AZ
Wayfinding Program

PROJECT NO.

SUBCONSULTANT

DATE January 8, 2015

DRAWN BY: JC/PR

REVISIONS
February 10, 2015
August 2016

SHEET TITLE
PARK.1A
Parking Trailblazer

SHEET NO.
C.13

These drawings are meant for DESIGN INTENT ONLY and are not for construction. Contractor shall verify and be responsible for all dimensions and conditions of the job. Contractor shall be familiar with the site and conditions it presents. This office must be notified of any variations from the dimensions and conditions shown on this drawing. Shop drawings and details must be submitted to this office for approval prior to proceeding with fabrication. All copy shall be proofread by client and legal requirements checked by legal department.

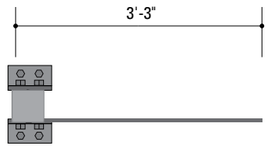

4 Top View: PARK.2
SCALE: 1/2" = 1'-0"

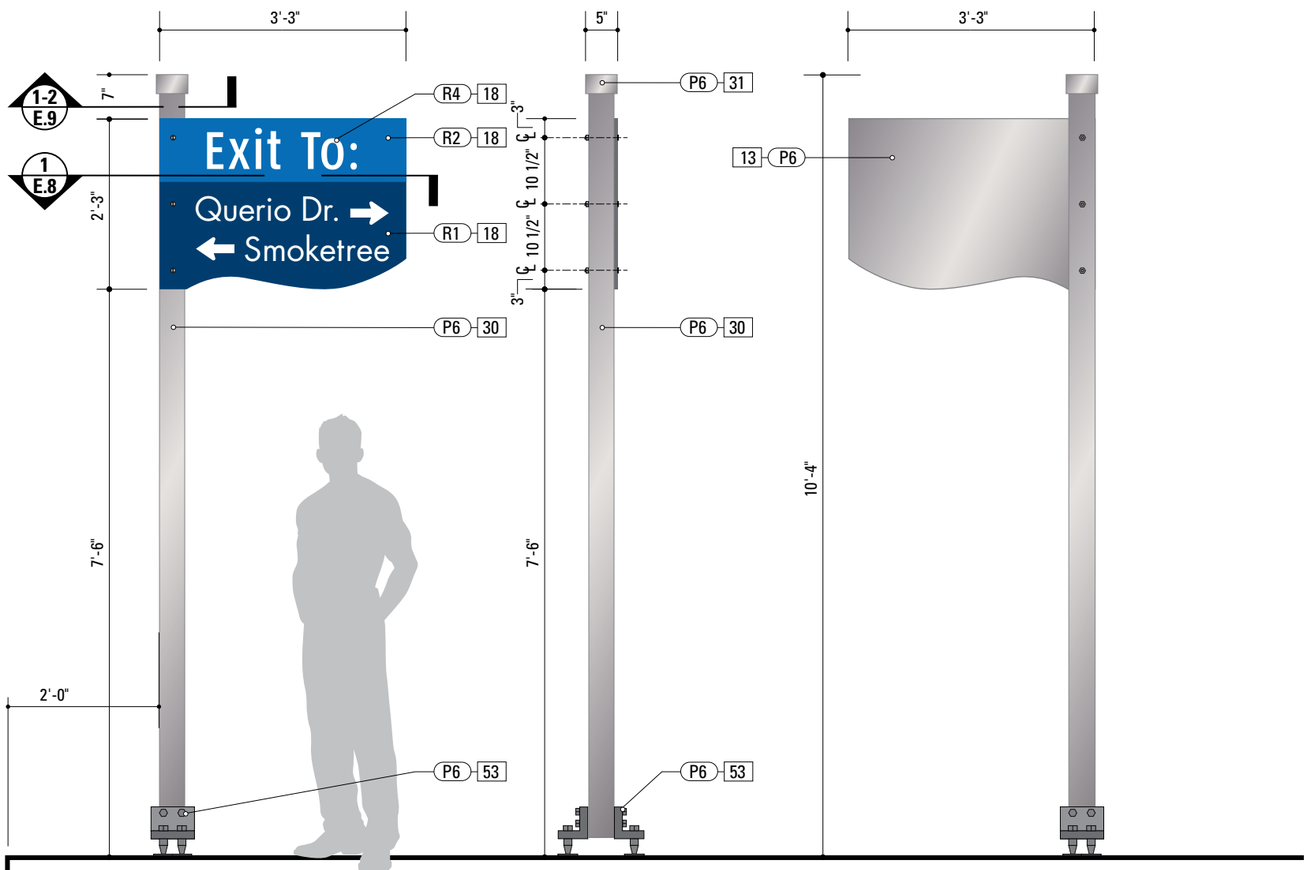

1 Front View: PARK.2
SCALE: 1/2" = 1'-0"

2 Side View: PARK.2
SCALE: 1/2" = 1'-0"

3 Rear View: PARK.2
SCALE: 1/2" = 1'-0"

SPECIFICATIONS **SIGN TYPE:** PARK.2 **FUNCTION:** Parking Exit Directional

13. SIGN PANEL - BACK
COLOR: custom, as noted
SURFACE PROCESS: Paint all exposed surfaces with Matthews Acrylic Polyurethane, with clear coat satin finish.

18. 1/4" SIGN PANEL - REFLECTIVE
MATERIAL: 1/4" thk Aluminum sheet
FABRICATION PROCESS: Router Cut
EDGES: Smooth
PANEL EDGES PROCESS: Paint all panel edges with Matthews Acrylic Polyurethane, with clear coat satin finish.
COLOR: Custom, as noted
GRAPHIC BACKGROUND AND COPY PROCESS: 3M custom inks print direct to 3930 with 3M approved UV/Graffiti Vinyl Over-laminate. (See Color Sheet for all color and material specifications)
FASTENER: Press-roll per 3M requirements. SS tamper-resistant hardware (Spanner bolt, expanded PTFE sealing washers, and Flex-Top expanding lock-nuts).

30. 4x4 POST
MATERIAL: 4" sq. x .250" wall Aluminum tube
FABRICATION PROCESS: Extruded
EDGES: Smooth
COLOR: Custom, as noted
SURFACE PROCESS: Paint all exposed surfaces with Matthews Acrylic Polyurethane, with clear coat satin finish.
FOOTER: Transpo® AS4 Break-Safe break-away system, according to specifications per ADOT.

31. 3x5 POST CAP
MATERIAL: Aluminum
FABRICATION PROCESS: Custom Cast
EDGES: Smooth
COLOR: Custom, as noted.
SURFACE PROCESS: Paint all exposed surfaces with Matthews Acrylic Polyurethane, with clear coat satin finish.
FASTENER: Mechanically with set screws.

53. BREAKAWAY FOOTER
FOOTER: The Transpo® Break-Safe AS4 break-away system, according to specifications per ADOT.

DESIGN NOTE:
Final design and shop drawings shall be supplied by the fabricator. An Arizona registered engineer is required to sign and seal the submittal of shop drawings.

NOTES
1. Fabricator shall verify the mounting conditions and provide a detail drawing for each mounting situation, prior to fabrication. Fabricator shall obtain approval from the Designer or Client for placement prior to fabrication.
2. Welds: All welds shall be ground smooth, paint all seams.
3. Hardware: All fasteners shall be concealed. If exposed, hardware shall be tamper proof fasteners, corrosion resistant, and color matching adjacent surfaces.
4. All painted sign surfaces to receive UV/Anti-Graffiti spray coating. All sign surfaces with reflective graphics to receive 3M approved UV/Anti-Graffiti overlaminate.

ENVIRONMENTS & EXPERIENCES
merje
120 North Church Street
Suite 208
West Chester, PA 19380
T 484.266.0648
www.merjedesign.com

CLIENT / PROJECT
Lake Havasu City, AZ
Wayfinding Program

PROJECT NO.

SUBCONSULTANT

DATE January 8, 2015
DRAWN BY: JC/PR

REVISIONS
February 10, 2015
August 2016

SHEET TITLE
PARK.2
Parking Exit Directional

SHEET NO.
C.14

These drawings are meant for DESIGN INTENT ONLY and are not for construction. Contractor shall verify and be responsible for all dimensions and conditions of the job. Contractor shall be familiar with the site and conditions it presents. This office must be notified of any variations from the dimensions and conditions shown on this drawing. Shop drawings and details must be submitted to this office for approval prior to proceeding with fabrication. All copy shall be proofread by client and legal requirements checked by legal department.

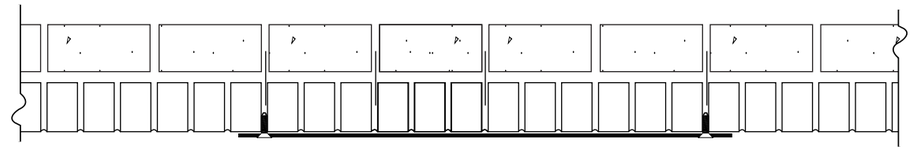

3 PARK.2 DETAIL: Brick Application
SCALE: 1" = 1'-0"

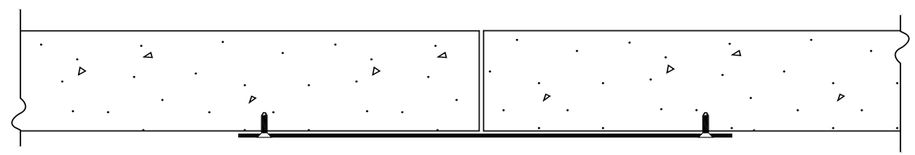

2 PARK.2 DETAIL: Concrete Application
SCALE: 1" = 1'-0"

Existing Conditions: Location #311

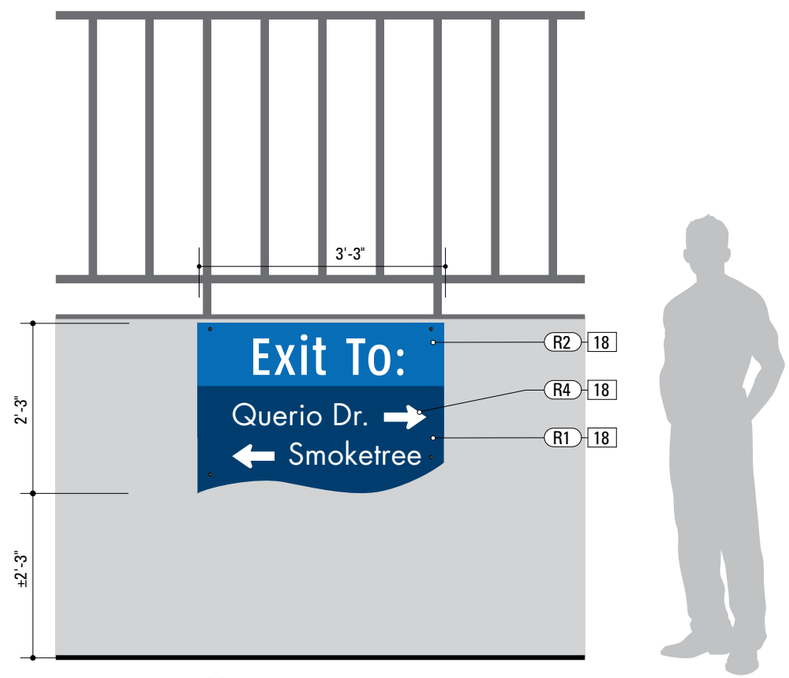

1 Front View: PARK.2A
SCALE: 1/2" = 1'-0"

SPECIFICATIONS **SIGN TYPE:** PARK.2A **FUNCTION:** Parking Exit Directional

18. 1/4" SIGN PANEL - REFLECTIVE
MATERIAL: 1/4" thk Aluminum sheet
FABRICATION PROCESS: Router Cut
EDGES: Smooth
PANEL EDGES PROCESS: Paint all panel edges with Matthews Acrylic Polyurethane, with clear coat satin finish.
COLOR: Custom, as noted
GRAPHIC BACKGROUND AND COPY PROCESS: 3M custom inks print direct to 3930 with 3M approved UV/Graffiti Vinyl Over-laminate. (See Color Sheet for all color and material specifications)
FASTENER: Press-roll per 3M requirements. SS tamper-resistant hardware (Spanner bolt, expanded PTFE sealing washers, and Flex-Top expanding lock-nuts).

DESIGN NOTE:
Final design and shop drawings shall be supplied by the fabricator. An Arizona registered engineer is required to sign and seal the submittal of shop drawings.

NOTES
1. Fabricator shall verify the mounting conditions and provide a detail drawing for each mounting situation, prior to fabrication. Fabricator shall obtain approval from the Designer or Client for placement prior to fabrication.
2. Welds: All welds shall be ground smooth, paint all seams.
3. Hardware: All fasteners shall be concealed. If exposed, hardware shall be tamper proof fasteners, corrosion resistant, and color matching adjacent surfaces.
4. All painted sign surfaces to receive UV/Anti-Graffiti spray coating. All sign surfaces with reflective graphics to receive 3M approved UV/Anti-Graffiti overlaminate.

ENVIRONMENTS & EXPERIENCES
merje
120 North Church Street
Suite 208
West Chester, PA 19380
T 484.266.0648
www.merjedesign.com

CLIENT / PROJECT
Lake Havasu City, AZ
Wayfinding Program

PROJECT NO.

SUBCONSULTANT

DATE January 8, 2015
DRAWN BY: JC/PR

REVISIONS
February 10, 2015
August 2016

SHEET TITLE
PARK.2A
Parking Exit Directional

SHEET NO.
C.15

These drawings are meant for DESIGN INTENT ONLY and are not for construction. Contractor shall verify and be responsible for all dimensions and conditions of the job. Contractor shall be familiar with the site and conditions it presents. This office must be notified of any variations from the dimensions and conditions shown on this drawing. Shop drawings and details must be submitted to this office for approval prior to proceeding with fabrication. All copy shall be proofread by client and legal requirements checked by legal department.

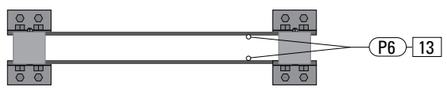

4 Top View: PARK.5A
SCALE: 1/2" = 1'-0"

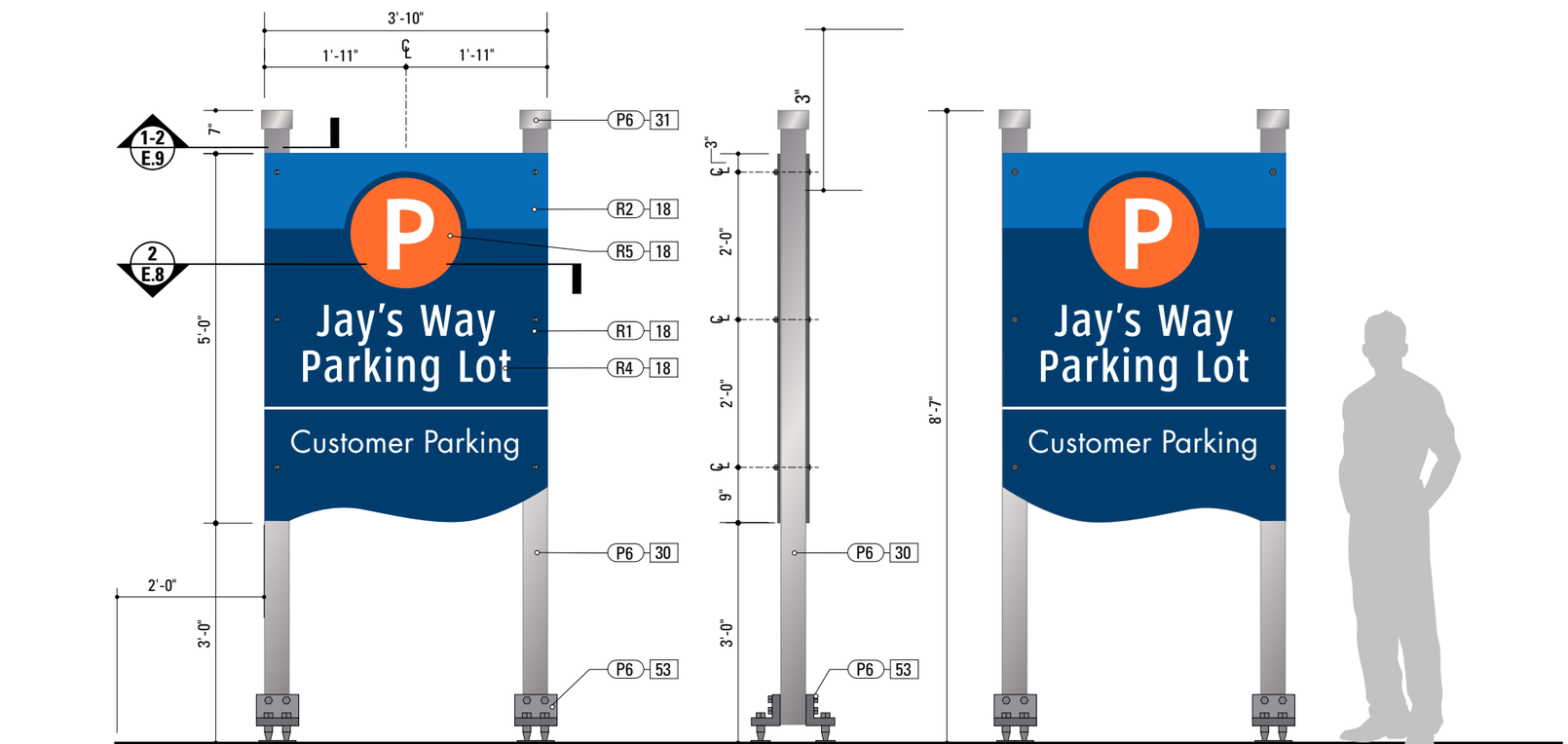

1 Front View: PARK.5A
SCALE: 1/2" = 1'-0"

2 Side View: PARK.5A
SCALE: 1/2" = 1'-0"

3 Rear View: PARK.5A
SCALE: 1/2" = 1'-0"

SPECIFICATIONS **SIGN TYPE:** PARK.5A **FUNCTION:** Parking Lot ID

13. SIGN PANEL - BACK
COLOR: custom, as noted
SURFACE PROCESS: Paint all exposed surfaces with Matthews Acrylic Polyurethane, with clear coat satin finish.

18. 1/4" SIGN PANEL - REFLECTIVE
MATERIAL: 1/4" thk Aluminum sheet
FABRICATION PROCESS: Router Cut
EDGES: Smooth
PANEL EDGES PROCESS: Paint all panel edges with Matthews Acrylic Polyurethane, with clear coat satin finish.
COLOR: Custom, as noted
GRAPHIC BACKGROUND AND COPY PROCESS: 3M custom inks print direct to 3930 with 3M approved UV/Graffiti Vinyl Over-laminate. (See Color Sheet for all color and material specifications)
FASTENER: Press-roll per 3M requirements. SS tamper-resistant hardware (Spanner bolt, expanded PTFE sealing washers, and Flex-Top expanding lock-nuts).

30. 4x4 POST
MATERIAL: 4" sq. x .250" wall Aluminum tube
FABRICATION PROCESS: Extruded
EDGES: Smooth
COLOR: Custom, as noted
SURFACE PROCESS: Paint all exposed surfaces with Matthews Acrylic Polyurethane, with clear coat satin finish.
FOOTER: Transpo® AS4 Break-Safe break-away system, according to specifications per ADOT.

31. 3x5 POST CAP
MATERIAL: Aluminum
FABRICATION PROCESS: Custom Cast
EDGES: Smooth
COLOR: Custom, as noted.
SURFACE PROCESS: Paint all exposed surfaces with Matthews Acrylic Polyurethane, with clear coat satin finish.
FASTENER: Mechanically with set screws.

53. BREAKAWAY FOOTER
FOOTER: The Transpo® Break-Safe AS4 break-away system, according to specifications per ADOT.

DESIGN NOTE:
Final design and shop drawings shall be supplied by the fabricator. An Arizona registered engineer is required to sign and seal the submittal of shop drawings.

NOTES
1. Fabricator shall verify the mounting conditions and provide a detail drawing for each mounting situation, prior to fabrication. Fabricator shall obtain approval from the Designer or Client for placement prior to fabrication.
2. Welds: All welds shall be ground smooth, paint all seams.
3. Hardware: All fasteners shall be concealed. If exposed, hardware shall be tamper proof fasteners, corrosion resistant, and color matching adjacent surfaces.
4. All painted sign surfaces to receive UV/Anti-Graffiti spray coating. All sign surfaces with reflective graphics to receive 3M approved UV/Anti-Graffiti overlaminate.

ENVIRONMENTS & EXPERIENCES
merje
120 North Church Street
Suite 208
West Chester, PA 19380
T 484.266.0648
www.merjedesign.com

CLIENT / PROJECT
Lake Havasu City, AZ
Wayfinding Program

PROJECT NO.

SUBCONSULTANT

DATE January 8, 2015
DRAWN BY: JC/PR

REVISIONS
February 10, 2015
August 2016

SHEET TITLE
PARK.5A
Parking Lot ID

SHEET NO.
C.16

These drawings are meant for DESIGN INTENT ONLY and are not for construction. Contractor shall verify and be responsible for all dimensions and conditions of the job. Contractor shall be familiar with the site and conditions it presents. This office must be notified of any variations from the dimensions and conditions shown on this drawing. Shop drawings and details must be submitted to this office for approval prior to proceeding with fabrication. All copy shall be proofread by client and legal requirements checked by legal department.

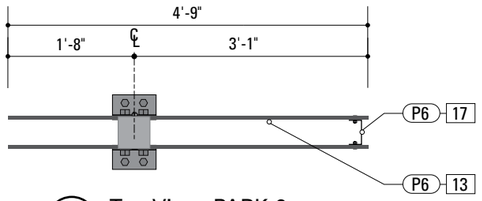

4 Top View: PARK.6
SCALE: 1/2" = 1'-0"

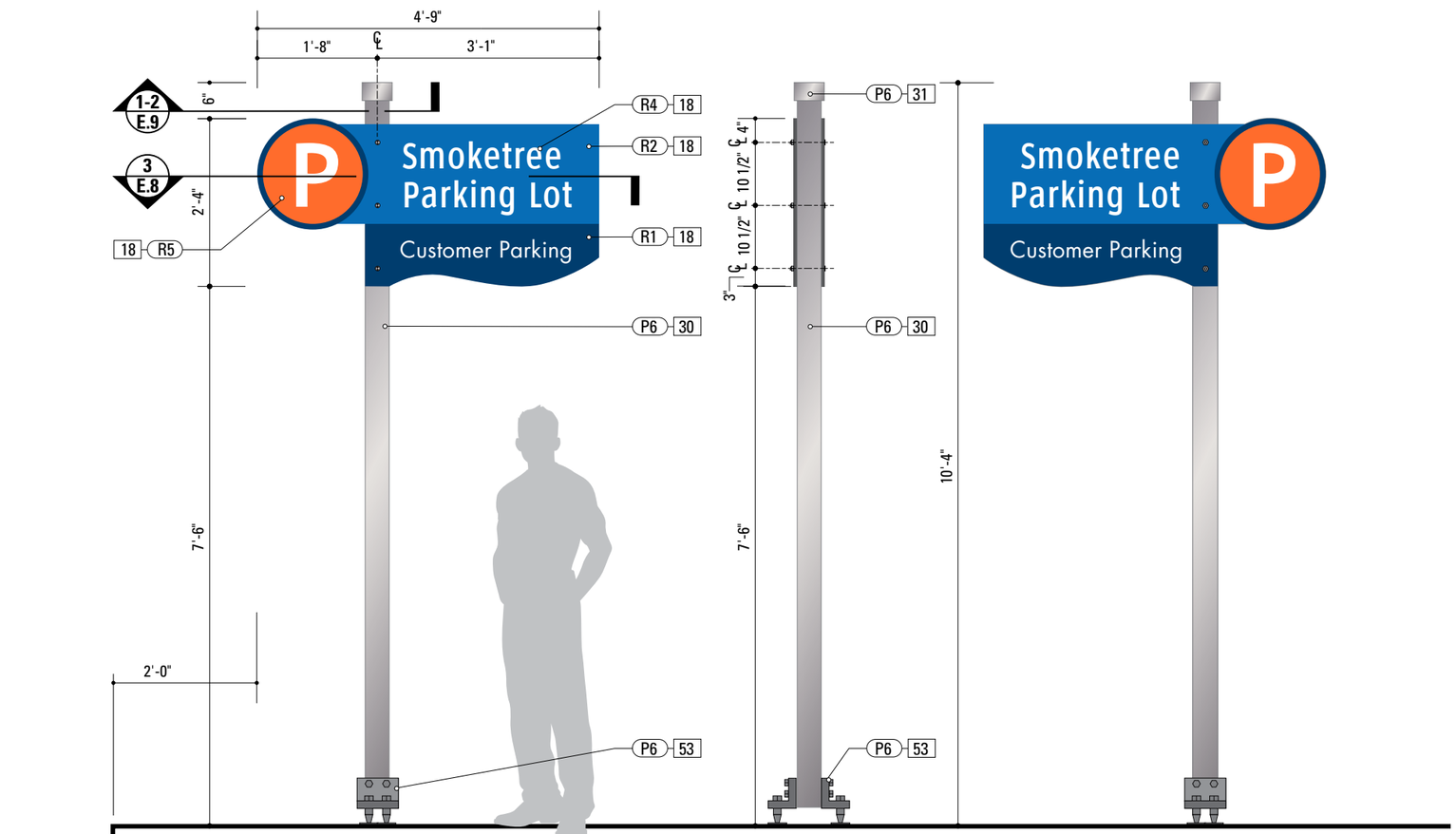

1 Front View: PARK.6
SCALE: 1/2" = 1'-0"

2 Side View: PARK.6
SCALE: 1/2" = 1'-0"

3 Rear View: PARK.6
SCALE: 1/2" = 1'-0"

SPECIFICATIONS **SIGN TYPE:** PARK.6 **FUNCTION:** Parking Lot ID

13. SIGN PANEL - BACK
COLOR: custom, as noted
SURFACE PROCESS: Paint all exposed surfaces with Matthews Acrylic Polyurethane, with clear coat satin finish.

17. PANEL BRACKET
MATERIAL: 1/8" thick Aluminum sheet
FABRICATION PROCESS: Router Cut, Brake-formed
EDGES: Square, Smooth
COLOR: custom, as noted
SURFACE PROCESS: Paint all exposed surfaces with Matthews Acrylic Polyurethane, with clear coat satin finish.
FASTENER: SS tamper-resistant hardware (Spanner bolt, expanded PTFE sealing washers, and Flex-Top expanding lock-nuts).

18. 1/4" SIGN PANEL - REFLECTIVE
MATERIAL: 1/4" thk Aluminum sheet
FABRICATION PROCESS: Router Cut
EDGES: Smooth
PANEL EDGES PROCESS: Paint all panel edges with Matthews Acrylic Polyurethane, with clear coat satin finish.
COLOR: Custom, as noted
GRAPHIC BACKGROUND AND COPY PROCESS: 3M custom inks print direct to 3930 with 3M approved UV/Graffiti Vinyl Over-laminate. (See Color Sheet for all color and material specifications)
FASTENER: Press-roll per 3M requirements. SS tamper-resistant hardware (Spanner bolt, expanded PTFE sealing washers, and Flex-Top expanding lock-nuts).

30. 4x4 POST
MATERIAL: 4" sq. x .250" wall Aluminum tube
FABRICATION PROCESS: Extruded
EDGES: Smooth
COLOR: Custom, as noted
SURFACE PROCESS: Paint all exposed surfaces with Matthews Acrylic Polyurethane, with clear coat satin finish.
FOOTER: Transpo® AS4 Break-Safe break-away system, according to specifications per ADOT.

31. 3x5 POST CAP
MATERIAL: Aluminum
FABRICATION PROCESS: Custom Cast
EDGES: Smooth
COLOR: Custom, as noted.
SURFACE PROCESS: Paint all exposed surfaces with Matthews Acrylic Polyurethane, with clear coat satin finish.
FASTENER: Mechanically with set screws.

53. BREAKAWAY FOOTER
FOOTER: The Transpo® Break-Safe AS4 break-away system, according to specifications per ADOT.

DESIGN NOTE:
Final design and shop drawings shall be supplied by the fabricator. An Arizona registered engineer is required to sign and seal the submittal of shop drawings.

NOTES
1. Fabricator shall verify the mounting conditions and provide a detail drawing for each mounting situation, prior to fabrication. Fabricator shall obtain approval from the Designer or Client for placement prior to fabrication.
2. Welds: All welds shall be ground smooth, paint all seams.
3. Hardware: All fasteners shall be concealed. If exposed, hardware shall be tamper proof fasteners, corrosion resistant, and color matching adjacent surfaces.
4. All painted sign surfaces to receive UV/Anti-Graffiti spray coating. All sign surfaces with reflective graphics to receive 3M approved UV/Anti-Graffiti overlaminate.

ENVIRONMENTS & EXPERIENCES
merje
120 North Church Street
Suite 208
West Chester, PA 19380
T 484.266.0648
www.merjedesign.com

CLIENT / PROJECT
Lake Havasu City, AZ
Wayfinding Program

PROJECT NO.

SUBCONSULTANT

DATE January 8, 2015

DRAWN BY: JC/PR

REVISIONS
February 10, 2015
August 2016

SHEET TITLE
PARK.6
Parking Lot ID

SHEET NO.
C.17

These drawings are meant for DESIGN INTENT ONLY and are not for construction. Contractor shall verify and be responsible for all dimensions and conditions of the job. Contractor shall be familiar with the site and conditions it presents. This office must be notified of any variations from the dimensions and conditions shown on this drawing. Shop drawings and details must be submitted to this office for approval prior to proceeding with fabrication. All copy shall be proofread by client and legal requirements checked by legal department.

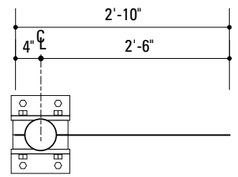

4 Top View: PDIR.1
SCALE: 1/2" = 1'-0"

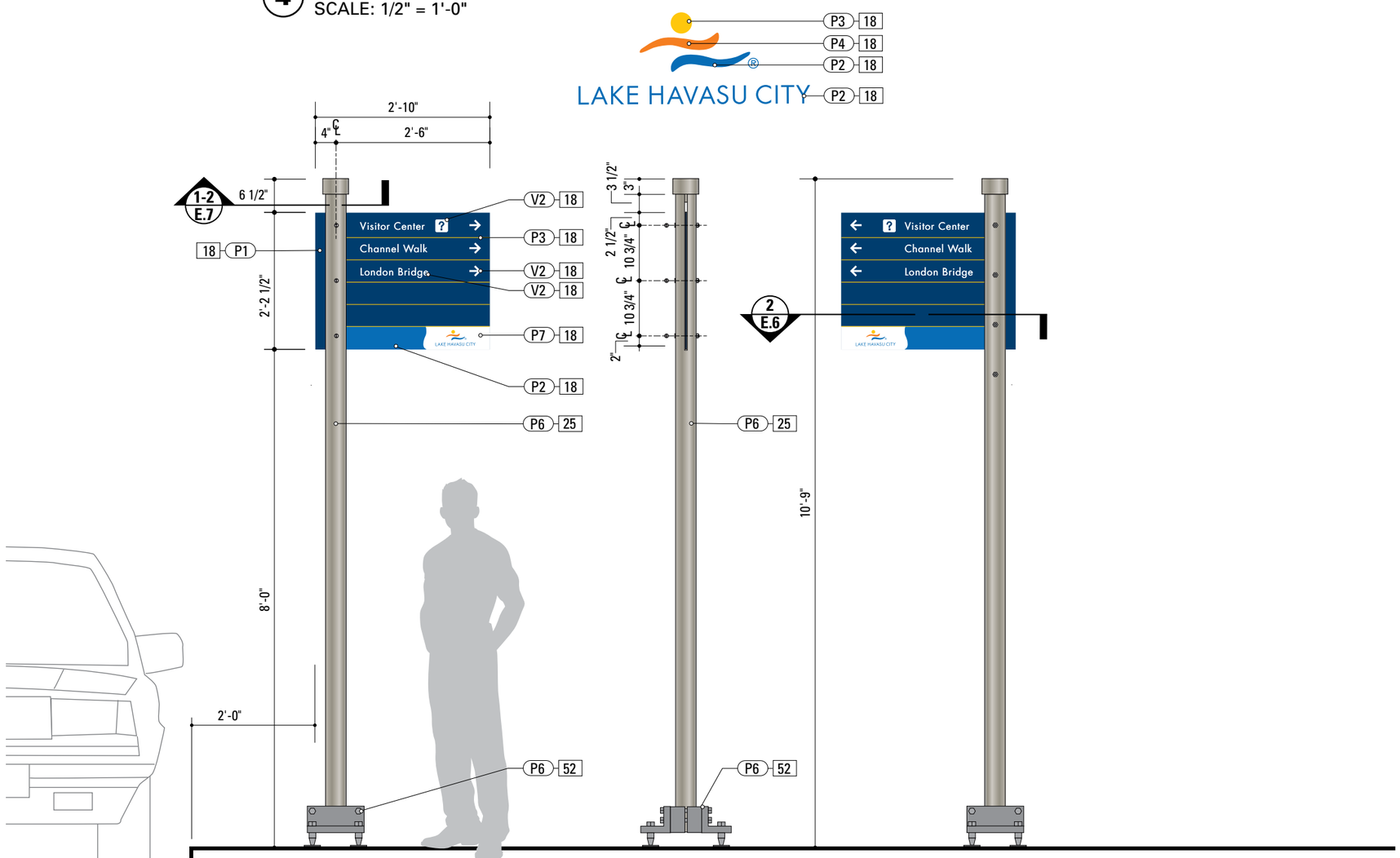

1 Front View: PDIR.1
SCALE: 1/2" = 1'-0"

2 Side View: PDIR.1
SCALE: 1/2" = 1'-0"

3 Rear View: PDIR.1
SCALE: 1/2" = 1'-0"

SPECIFICATIONS **SIGN TYPE:** PDIR.1 **FUNCTION:** Pedestrian Directional

18. 1/4" SIGN PANEL - PAINTED
MATERIAL: 1/4" thk Aluminum sheet
FABRICATION PROCESS: Router Cut
EDGES: Smooth
PANEL EDGES PROCESS: Paint all panel edges with Matthews Acrylic Polyurethane, with clear coat satin finish.
COLOR: Custom, as noted.
SURFACE PROCESS: Paint all exposed surfaces with Matthews Acrylic Polyurethane, with clear coat satin finish. White cut vinyl letters applied to painted sign face (See Color Sheet for all color and material specifications)
FASTENER: Apply vinyl per 3M requirements. SS tamper-resistant hardware (Spanner bolt, expanded PTFE sealing washers, and Flex-Top expanding lock-nuts).

25. 3.5 POLE
MATERIAL: Aluminum SCH 40 Pipe 6061T6 - 3.5 (4.00" OD x .226" wall)
FABRICATION PROCESS: Extruded
EDGES: Smooth
COLOR: Custom, as noted
SURFACE PROCESS: Paint all exposed surfaces with Matthews Acrylic Polyurethane, with clear coat satin finish.
FOOTER: Transpo® AP4 Break-Safe break-away system, according to specifications per ADOT.

52. BREAKAWAY FOOTER
FOOTER: The Transpo® Break-Safe AP4 break-away system, according to specifications per ADOT.

DESIGN NOTE:
Final design and shop drawings shall be supplied by the fabricator. An Arizona registered engineer is required to sign and seal the submittal of shop drawings.

NOTES
1. Fabricator shall verify the mounting conditions and provide a detail drawing for each mounting situation, prior to fabrication. Fabricator shall obtain approval from the Designer or Client for placement prior to fabrication.
2. Welds: All welds shall be ground smooth, paint all seams.
3. Hardware: All fasteners shall be concealed. If exposed, hardware shall be tamper proof fasteners, corrosion resistant, and color matching adjacent surfaces.
4. All painted sign surfaces to receive UV/Anti-Graffiti spray coating. All sign surfaces with reflective graphics to receive 3M approved UV/Anti-Graffiti overlaminate.

ENVIRONMENTS & EXPERIENCES
merje
120 North Church Street
Suite 208
West Chester, PA 19380
T 484.266.0648
www.merjedesign.com

CLIENT / PROJECT
Lake Havasu City, AZ Wayfinding Program

PROJECT NO.

SUBCONSULTANT

DATE January 8, 2015
DRAWN BY: JC/PR

REVISIONS
February 10, 2015
August 2016

SHEET TITLE
PDIR.1 Pedestrian Directional

SHEET NO.
C.18

These drawings are meant for DESIGN INTENT ONLY and are not for construction. Contractor shall verify and be responsible for all dimensions and conditions of the job. Contractor shall be familiar with the site and conditions it presents. This office must be notified of any variations from the dimensions and conditions shown on this drawing. Shop drawings and details must be submitted to this office for approval prior to proceeding with fabrication. All copy shall be proofread by client and legal requirements checked by legal department.

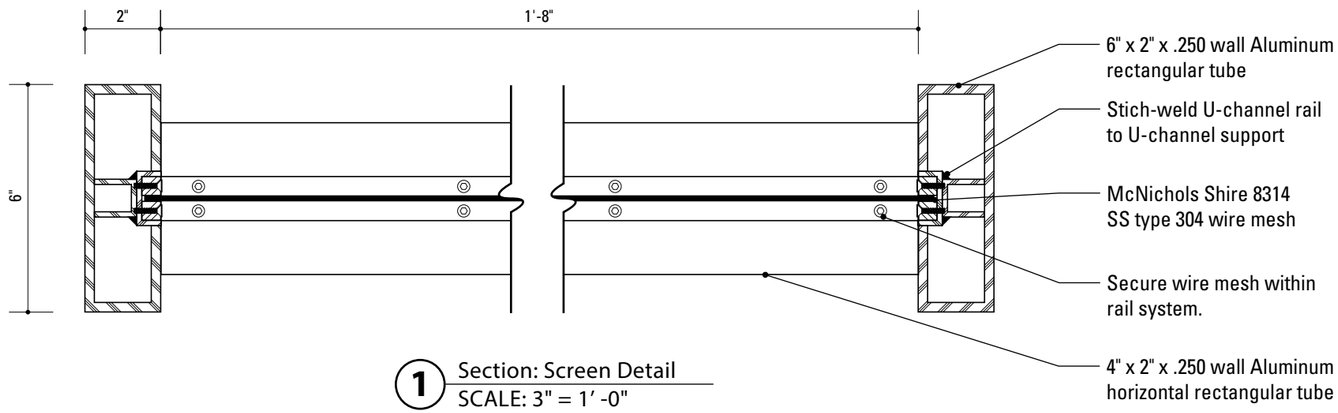

1 Section: Screen Detail
SCALE: 3" = 1' -0"

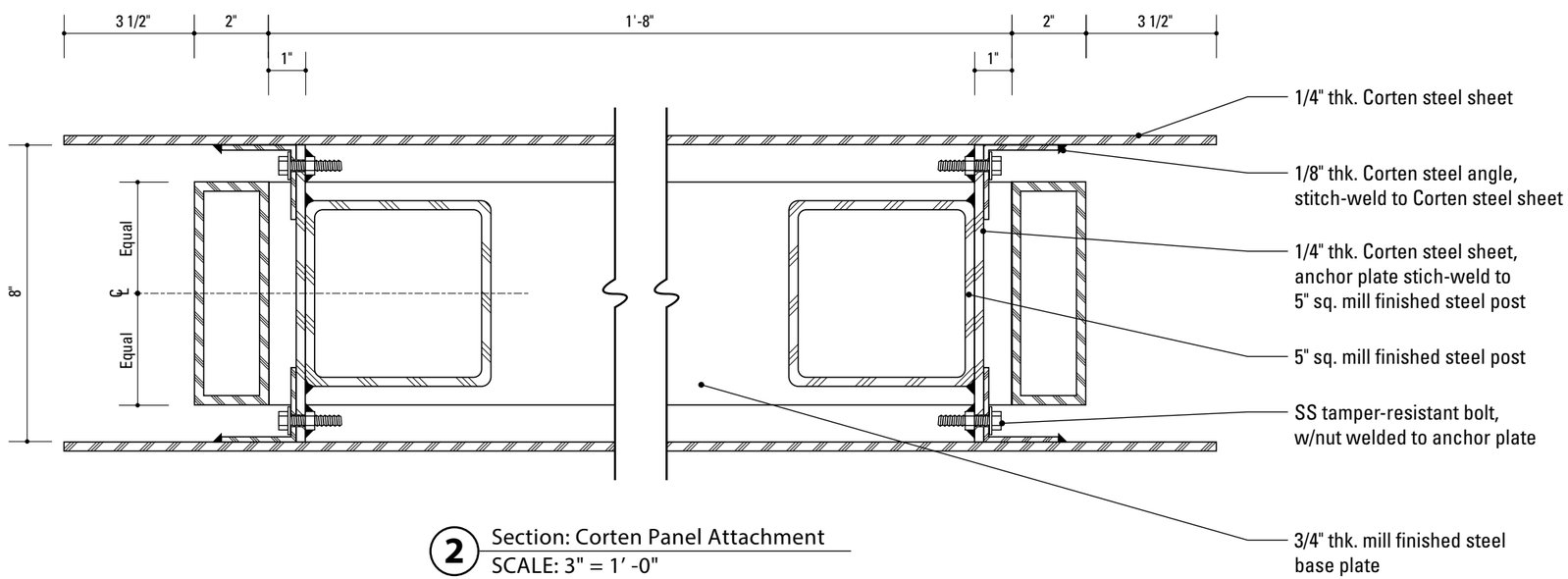

2 Section: Corten Panel Attachment
SCALE: 3" = 1' -0"

SPECIFICATIONS

Construction Details
Sign Type:
DIST.1
DIST.2

See Sheet E.10 for DIST.1 footer details.
See Sheet E.11 for DIST.2 footer details.

DESIGN NOTE:
Final design and shop drawings shall be supplied by the fabricator. An Arizona engineer is required to sign and seal the submittal of shop drawings.

NOTES

1. Fabricator shall verify the mounting conditions and provide a detail drawing for each mounting situation, prior to fabrication. Fabricator shall obtain approval from the Designer or Client for placement prior to fabrication.
2. Welds: All welds shall be ground smooth, paint all seams.
3. Hardware: All fasteners shall be concealed. If exposed, hardware shall be tamper proof fasteners, corrosion resistant, and color matching adjacent surfaces.
4. All painted sign surfaces to receive UV/Anti-Graffiti spray coating. All sign surfaces with reflective graphics to receive 3M approved UV/Anti-Graffiti overlaminate.

ENVIRONMENTS & EXPERIENCES
merje
120 North Church Street
Suite 208
West Chester, PA 19380
T 484.266.0648
www.merjedesign.com

CLIENT / PROJECT
Lake Havasu City, AZ Wayfinding Program

PROJECT NO.

SUBCONSULTANT

SHEET TITLE
DIST.1 & DIST.2 Section Details

DATE January 8, 2015
DRAWN BY: JC/PR

REVISIONS
February 10, 2015
August 2016

These drawings are meant for DESIGN INTENT ONLY and are not for construction. Contractor shall verify and be responsible for all dimensions and conditions of the job. Contractor shall be familiar with the site and conditions it presents. This office must be notified of any variations from the dimensions and conditions shown on this drawing. Shop drawings and details must be submitted to this office for approval prior to proceeding with fabrication. All copy shall be proofread by client and legal requirements checked by legal department.

SHEET NO.
E.1

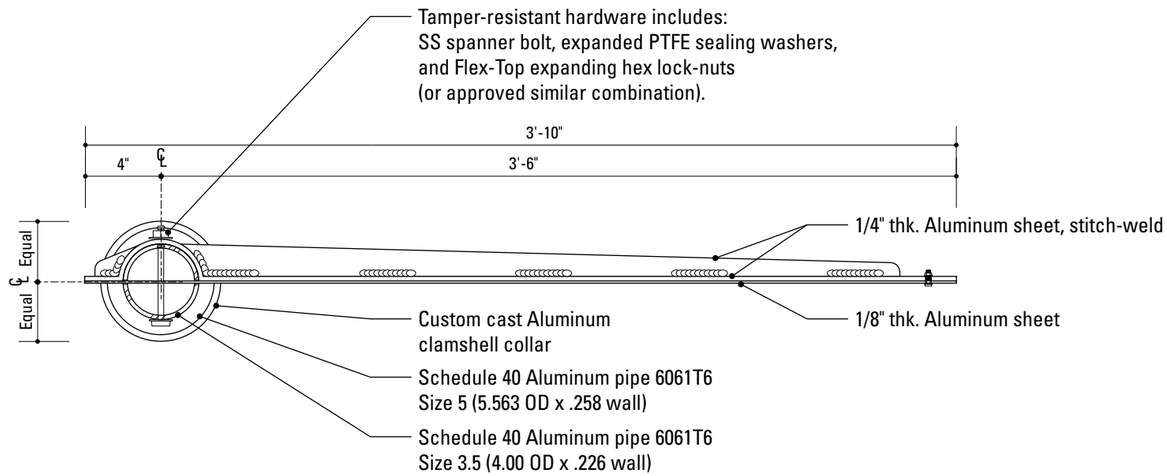

1 Section: Vehicular Directional Post & Panel Detail
SCALE: 1 1/2" = 1' -0"

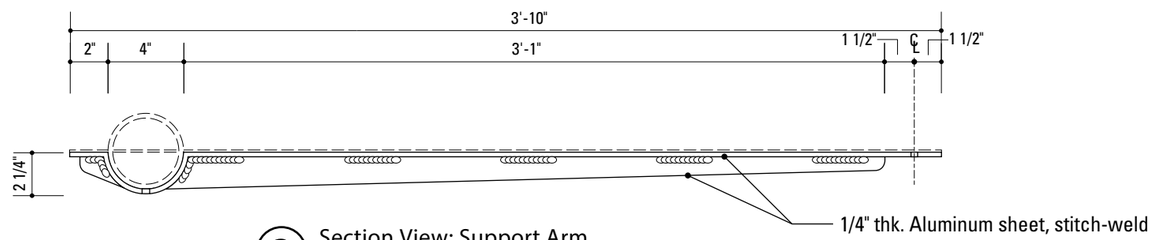

2 Section View: Support Arm
SCALE: 1 1/2" = 1' -0"

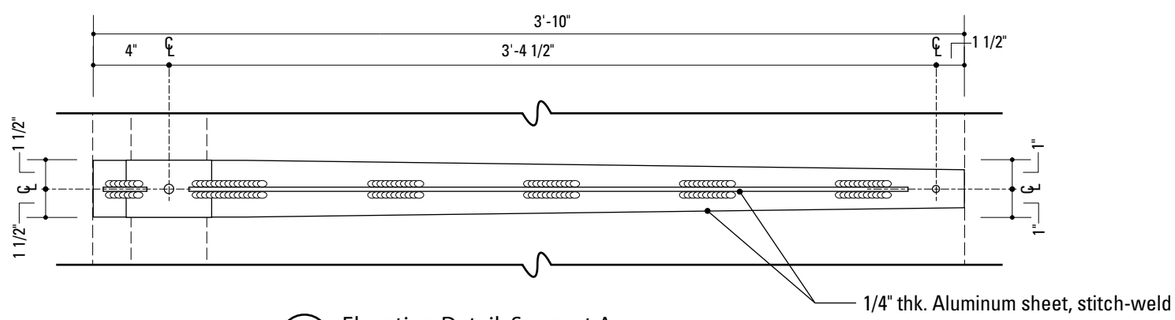

3 Elevation Detail: Support Arm
SCALE: 1 1/2" = 1' -0"

SPECIFICATIONS

Support Arm Construction Details
Sign Type:
VDIR.1
VDIR.2
VDIR.3
VDIR.3-LEFT

See Sheet E.12–13 for break-away system details.

DESIGN NOTE:
Final design and shop drawings shall be supplied by the fabricator. An Arizona registered engineer is required to sign and seal the submittal of shop drawings.

NOTES

1. Fabricator shall verify the mounting conditions and provide a detail drawing for each mounting situation, prior to fabrication. Fabricator shall obtain approval from the Designer or Client for placement prior to fabrication.
2. Welds: All welds shall be ground smooth, paint all seams.
3. Hardware: All fasteners shall be concealed. If exposed, hardware shall be tamper proof fasteners, corrosion resistant, and color matching adjacent surfaces.
4. All painted sign surfaces to receive UV/Anti-Graffiti spray coating. All sign surfaces with reflective graphics to receive 3M approved UV/Anti-Graffiti overlaminate.

E N V I R O N M E N T S & E X P E R I E N C E S

merje

120 North Church Street
Suite 208
West Chester, PA 19380
T 484.266.0648
www.merjedesign.com

CLIENT / PROJECT

Lake Havasu City, AZ
Wayfinding Program

PROJECT NO.

SUBCONSULTANT

DATE January 8, 2015

DRAWN BY: JC/PR

REVISIONS

February 10, 2015

August 2016

These drawings are meant for DESIGN INTENT ONLY and are not for construction. Contractor shall verify and be responsible for all dimensions and conditions of the job. Contractor shall be familiar with the site and conditions it presents. This office must be notified of any variations from the dimensions and conditions shown on this drawing. Shop drawings and details must be submitted to this office for approval prior to proceeding with fabrication. All copy shall be proofread by client and legal requirements checked by legal department.

SHEET TITLE

VDIR.1–VDIR.3-LEFT
Support Arm
Section Details

SHEET NO.

E.2

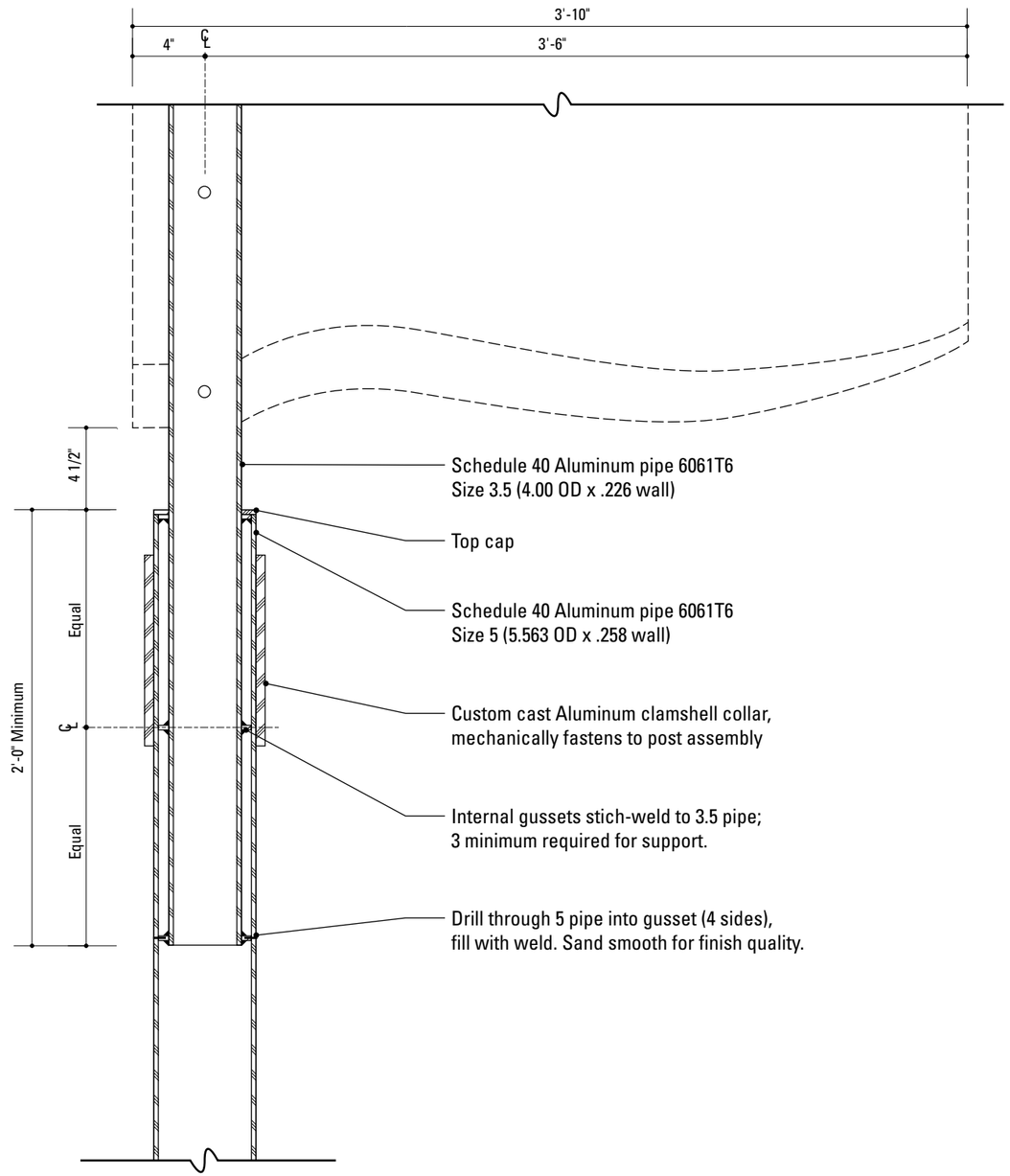

1 Section: Vehicular Directional Post Detail
SCALE: 1 1/2" = 1' -0"

SPECIFICATIONS

Post-to-Post Construction Details
Sign Type:
VDIR.1
VDIR.2
VDIR.3
VDIR.3-LEFT

See Sheet E.12–13 for break-away system details.

DESIGN NOTE:
Final design and shop drawings shall be supplied by the fabricator. An Arizona registered engineer is required to sign and seal the submittal of shop drawings.

NOTES

1. Fabricator shall verify the mounting conditions and provide a detail drawing for each mounting situation, prior to fabrication. Fabricator shall obtain approval from the Designer or Client for placement prior to fabrication.
2. Welds: All welds shall be ground smooth, paint all seams.
3. Hardware: All fasteners shall be concealed. If exposed, hardware shall be tamper proof fasteners, corrosion resistant, and color matching adjacent surfaces.
4. All painted sign surfaces to receive UV/Anti-Graffiti spray coating. All sign surfaces with reflective graphics to receive 3M approved UV/Anti-Graffiti overlaminate.

ENVIRONMENTS & EXPERIENCES
merje
120 North Church Street
Suite 208
West Chester, PA 19380
T 484.266.0648
www.merjedesign.com

CLIENT / PROJECT
Lake Havasu City, AZ
Wayfinding Program

PROJECT NO.

SUBCONSULTANT

DATE January 8, 2015

DRAWN BY: JC/PR

REVISIONS
February 10, 2015
August 2016

SHEET TITLE
VDIR.1–VDIR.3-LEFT
Post-to-Post
Section Details

SHEET NO.
E.3

These drawings are meant for DESIGN INTENT ONLY and are not for construction. Contractor shall verify and be responsible for all dimensions and conditions of the job. Contractor shall be familiar with the site and conditions it presents. This office must be notified of any variations from the dimensions and conditions shown on this drawing. Shop drawings and details must be submitted to this office for approval prior to proceeding with fabrication. All copy shall be proofread by client and legal requirements checked by legal department.

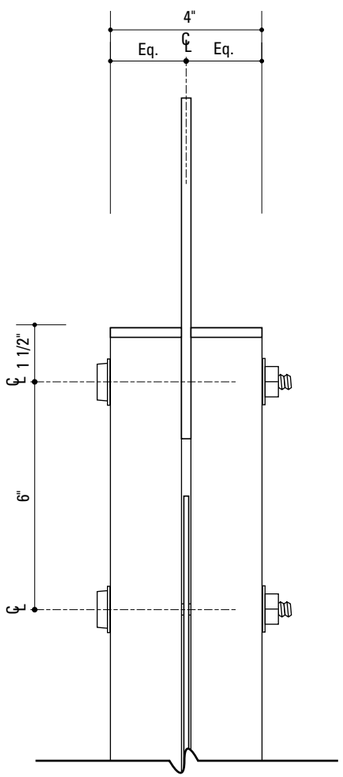

1 Disc Detail: Side View
SCALE: 3" = 1' -0"

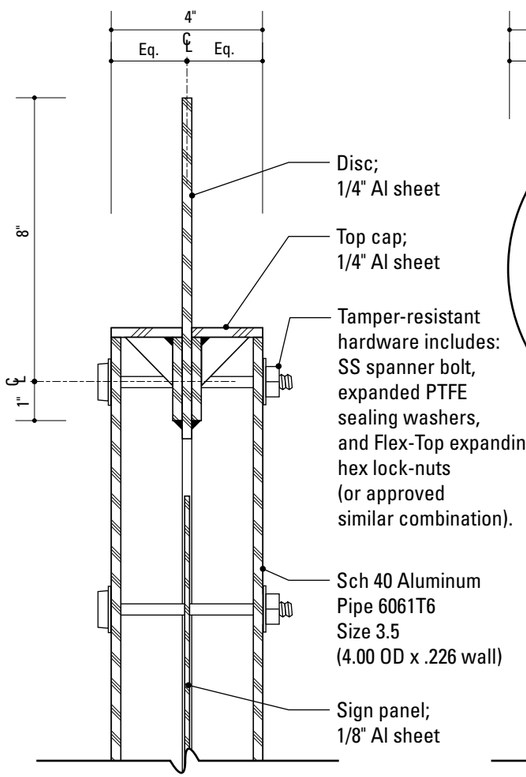

2 Side Section: Disc Detail
SCALE: 3" = 1' -0"

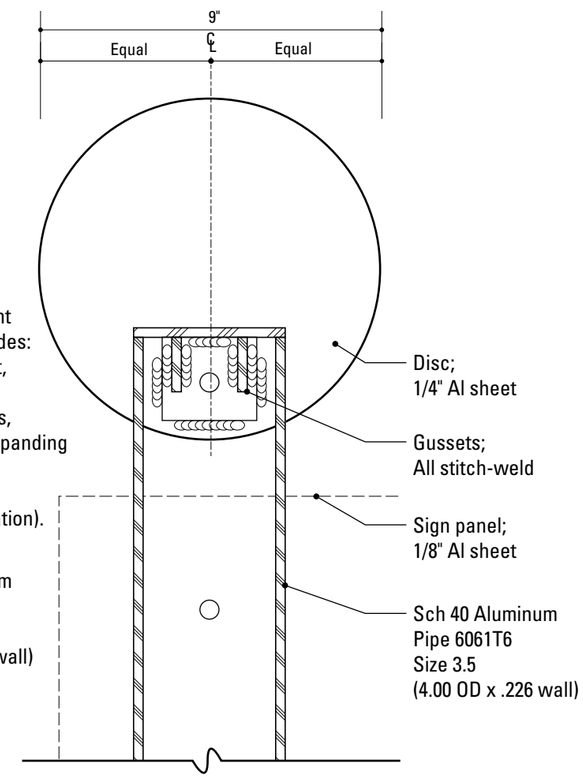

3 Front Section: Disc Detail
SCALE: 3" = 1' -0"

SPECIFICATIONS

Disc Construction Details
Sign Type:
VDIR.1
VDIR.2
VDIR.2A
VDIR.3
VDIR.3-LEFT
DEST.1

See Sheet E.12–13 for break-away system details.

DESIGN NOTE:
Final design and shop drawings shall be supplied by the fabricator. An Arizona registered engineer is required to sign and seal the submittal of shop drawings.

NOTES

1. Fabricator shall verify the mounting conditions and provide a detail drawing for each mounting situation, prior to fabrication. Fabricator shall obtain approval from the Designer or Client for placement prior to fabrication.
2. Welds: All welds shall be ground smooth, paint all seams.
3. Hardware: All fasteners shall be concealed. If exposed, hardware shall be tamper proof fasteners, corrosion resistant, and color matching adjacent surfaces.
4. All painted sign surfaces to receive UV/Anti-Graffiti spray coating. All sign surfaces with reflective graphics to receive 3M approved UV/Anti-Graffiti overlaminate.

ENVIRONMENTS & EXPERIENCES
merje
120 North Church Street
Suite 208
West Chester, PA 19380
T 484.266.0648
www.merjedesign.com

CLIENT / PROJECT
Lake Havasu City, AZ
Wayfinding Program

PROJECT NO.

SUBCONSULTANT

DATE January 8, 2015

DRAWN BY: JC/PR

REVISIONS
February 10, 2015
August 2016

SHEET TITLE
Disc
Section Details

SHEET NO.
E.4

These drawings are meant for DESIGN INTENT ONLY and are not for construction. Contractor shall verify and be responsible for all dimensions and conditions of the job. Contractor shall be familiar with the site and conditions it presents. This office must be notified of any variations from the dimensions and conditions shown on this drawing. Shop drawings and details must be submitted to this office for approval prior to proceeding with fabrication. All copy shall be proofread by client and legal requirements checked by legal department.

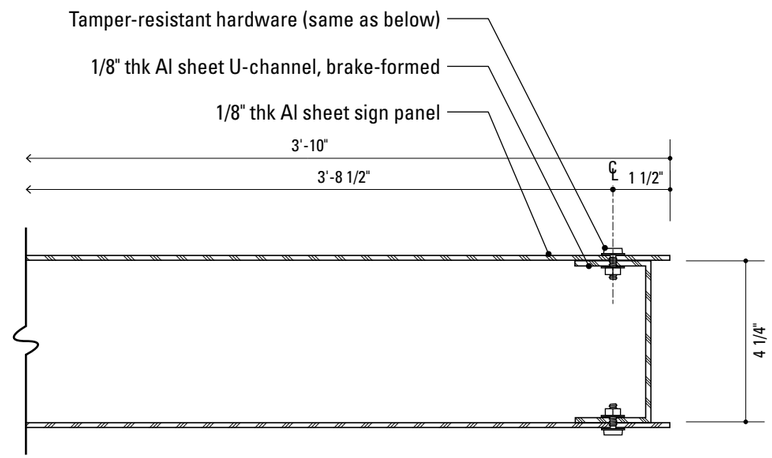

2 Section: VDIR.2A double panel end-detail
SCALE: 3" = 1' -0"

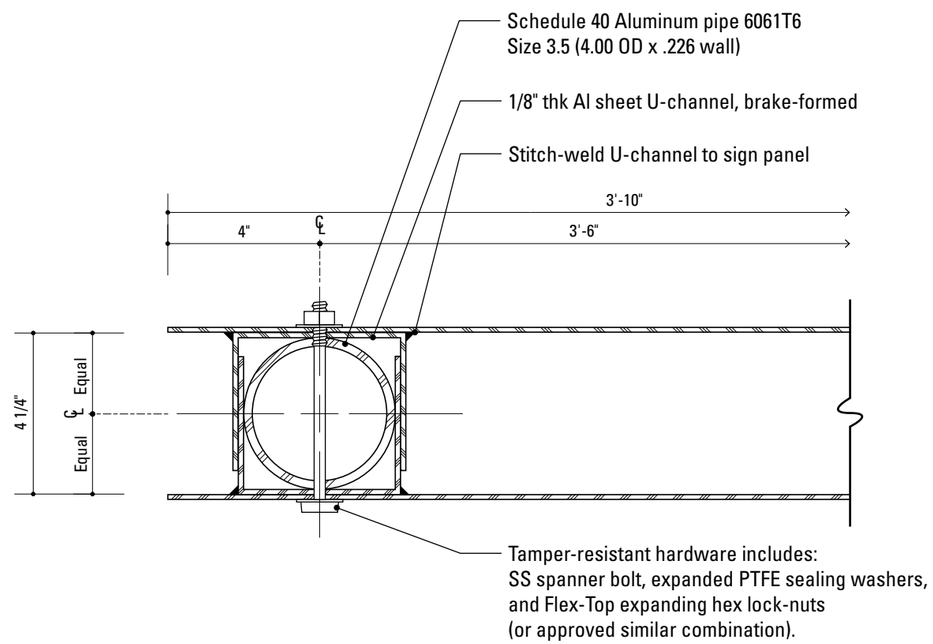

1 Section: VDIR.2A Sleeve Detail - double panel
SCALE: 3" = 1' -0"

SPECIFICATIONS

Construction Details
Sign Type:
VDIR.2A

See Sheet E.12-13 for break-away system details.

DESIGN NOTE:
Final design and shop drawings shall be supplied by the fabricator. An Arizona registered engineer is required to sign and seal the submittal of shop drawings.

NOTES

1. Fabricator shall verify the mounting conditions and provide a detail drawing for each mounting situation, prior to fabrication. Fabricator shall obtain approval from the Designer or Client for placement prior to fabrication.
2. Welds: All welds shall be ground smooth, paint all seams.
3. Hardware: All fasteners shall be concealed. If exposed, hardware shall be tamper proof fasteners, corrosion resistant, and color matching adjacent surfaces.
4. All painted sign surfaces to receive UV/Anti-Graffiti spray coating. All sign surfaces with reflective graphics to receive 3M approved UV/Anti-Graffiti overlaminate.

ENVIRONMENTS & EXPERIENCES

merje

120 North Church Street
Suite 208
West Chester, PA 19380
T 484.266.0648
www.merjedesign.com

CLIENT / PROJECT

Lake Havasu City, AZ
Wayfinding Program

PROJECT NO.

SUBCONSULTANT

DATE January 8, 2015

DRAWN BY: JC/PR

REVISIONS

February 10, 2015

August 2016

SHEET TITLE

VDIR.2A
Section Details

SHEET NO.

E.5

These drawings are meant for DESIGN INTENT ONLY and are not for construction. Contractor shall verify and be responsible for all dimensions and conditions of the job. Contractor shall be familiar with the site and conditions it presents. This office must be notified of any variations from the dimensions and conditions shown on this drawing. Shop drawings and details must be submitted to this office for approval prior to proceeding with fabrication. All copy shall be proofread by client and legal requirements checked by legal department.

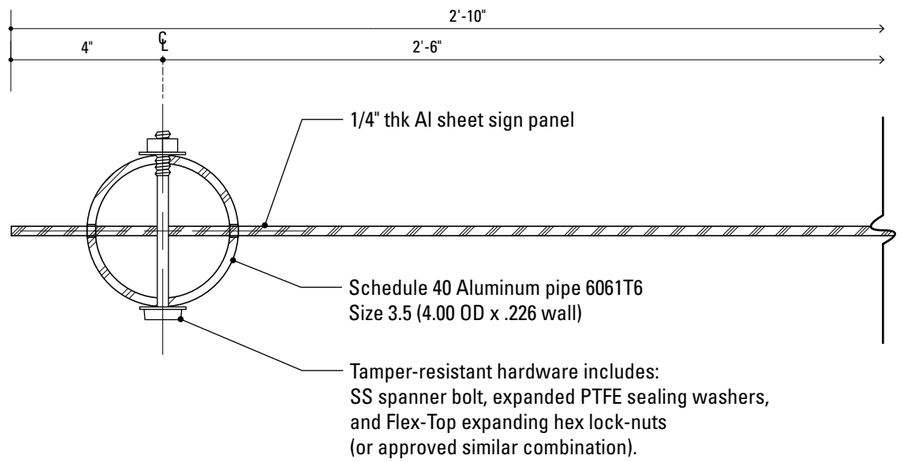

2 Section: RESIDENT.1 Detail - post & panel
SCALE: 3" = 1' -0"

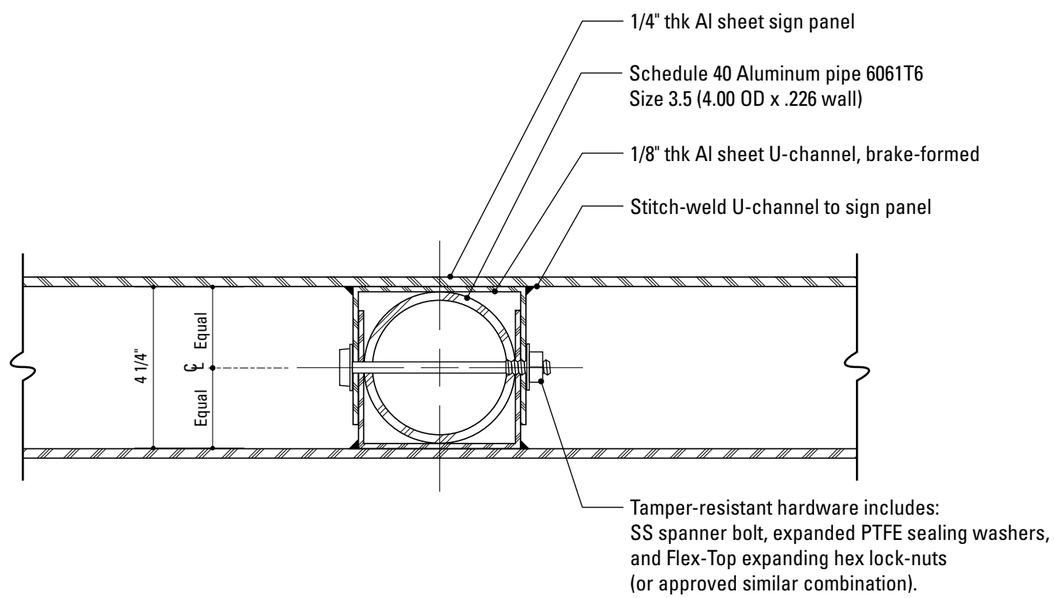

1 Section: DEST.1 Sleeve Detail - double panel
SCALE: 3" = 1' -0"

SPECIFICATIONS

Construction Details
Sign Type:
DEST.1
RESIDENT.1

See Sheet E.12-13 for DEST.1 break-away system details.
See Sheet E.17-18 for RESIDENT.1 break-away system details.

DESIGN NOTE:
Final design and shop drawings shall be supplied by the fabricator. An Arizona registered engineer is required to sign and seal the submittal of shop drawings.

NOTES

1. Fabricator shall verify the mounting conditions and provide a detail drawing for each mounting situation, prior to fabrication. Fabricator shall obtain approval from the Designer or Client for placement prior to fabrication.
2. Welds: All welds shall be ground smooth, paint all seams.
3. Hardware: All fasteners shall be concealed. If exposed, hardware shall be tamper proof fasteners, corrosion resistant, and color matching adjacent surfaces.
4. All painted sign surfaces to receive UV/Anti-Graffiti spray coating. All sign surfaces with reflective graphics to receive 3M approved UV/Anti-Graffiti overlaminate.

ENVIRONMENTS & EXPERIENCES
merje
120 North Church Street
Suite 208
West Chester, PA 19380
T 484.266.0648
www.merjedesign.com

CLIENT / PROJECT
Lake Havasu City, AZ
Wayfinding Program

PROJECT NO.

SUBCONSULTANT

SHEET TITLE
DEST.1 & RESIDENT.1 Section Details

DATE January 8, 2015
DRAWN BY: JC/PR

REVISIONS
February 10, 2015
August 2016

These drawings are meant for DESIGN INTENT ONLY and are not for construction. Contractor shall verify and be responsible for all dimensions and conditions of the job. Contractor shall be familiar with the site and conditions it presents. This office must be notified of any variations from the dimensions and conditions shown on this drawing. Shop drawings and details must be submitted to this office for approval prior to proceeding with fabrication. All copy shall be proofread by client and legal requirements checked by legal department.

SHEET NO.
E.6

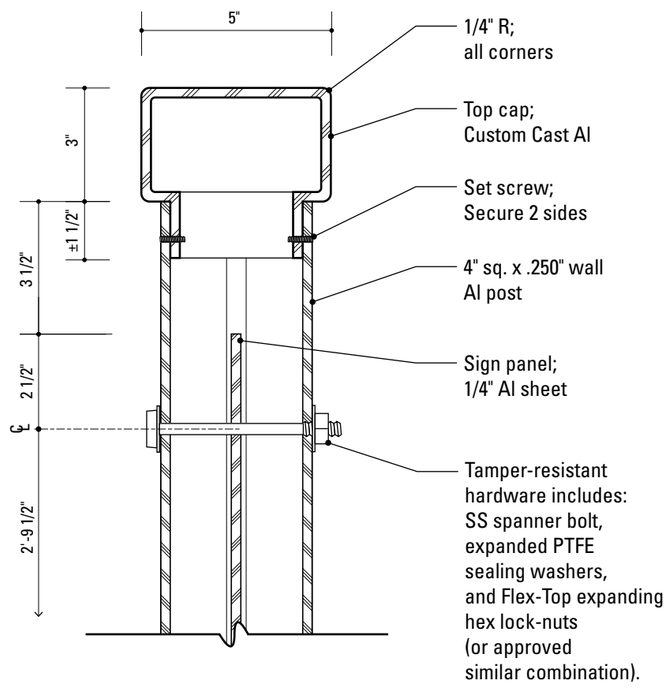

1 Round Top Detail: Side View
SCALE: 3" = 1' -0"

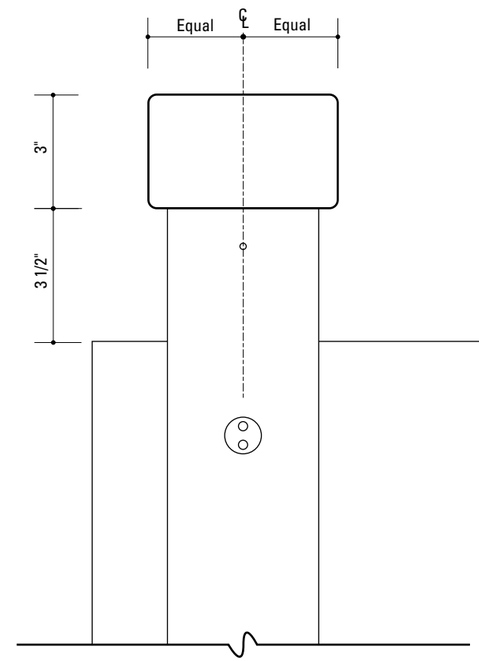

2 Round Top Detail: Front View
SCALE: 3" = 1' -0"

SPECIFICATIONS

Round Top Construction Details
Sign Type:
RESIDENT.1

See Sheet E.17–18 for break-away system details.

DESIGN NOTE:
Final design and shop drawings shall be supplied by the fabricator. An Arizona registered engineer is required to sign and seal the submittal of shop drawings.

NOTES

1. Fabricator shall verify the mounting conditions and provide a detail drawing for each mounting situation, prior to fabrication. Fabricator shall obtain approval from the Designer or Client for placement prior to fabrication.
2. Welds: All welds shall be ground smooth, paint all seams.
3. Hardware: All fasteners shall be concealed. If exposed, hardware shall be tamper proof fasteners, corrosion resistant, and color matching adjacent surfaces.
4. All painted sign surfaces to receive UV/Anti-Graffiti spray coating. All sign surfaces with reflective graphics to receive 3M approved UV/Anti-Graffiti overlaminate.

ENVIRONMENTS & EXPERIENCES

merje

120 North Church Street
Suite 208
West Chester, PA 19380
T 484.266.0648
www.merjedesign.com

CLIENT / PROJECT

Lake Havasu City, AZ
Wayfinding Program

PROJECT NO.

SUBCONSULTANT

DATE January 8, 2015

DRAWN BY: JC/PR

REVISIONS

February 10, 2015

August 2016

These drawings are meant for DESIGN INTENT ONLY and are not for construction. Contractor shall verify and be responsible for all dimensions and conditions of the job. Contractor shall be familiar with the site and conditions it presents. This office must be notified of any variations from the dimensions and conditions shown on this drawing. Shop drawings and details must be submitted to this office for approval prior to proceeding with fabrication. All copy shall be proofread by client and legal requirements checked by legal department.

SHEET TITLE

Round Top
Section Details

SHEET NO.

E.7

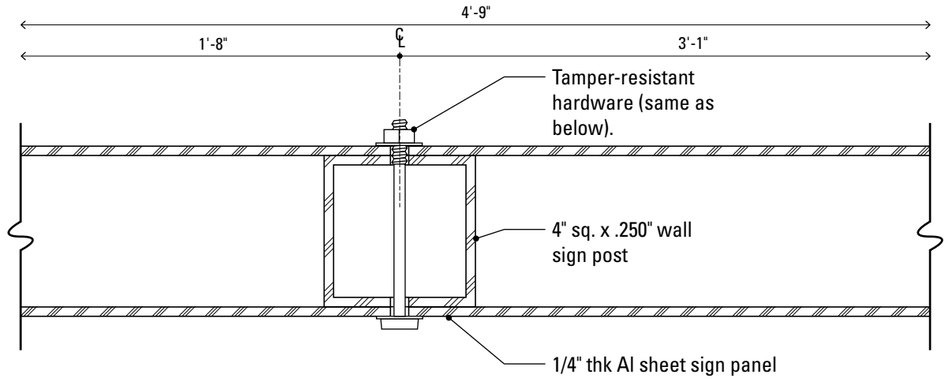

3 Section: PARK.6 Attachment Detail
SCALE: 3" = 1' -0"

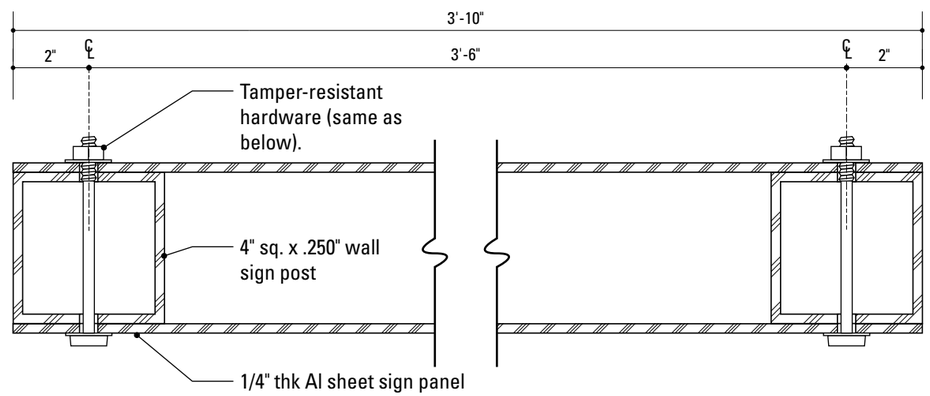

2 Section: PARK.5A Attachment Detail
SCALE: 3" = 1' -0"

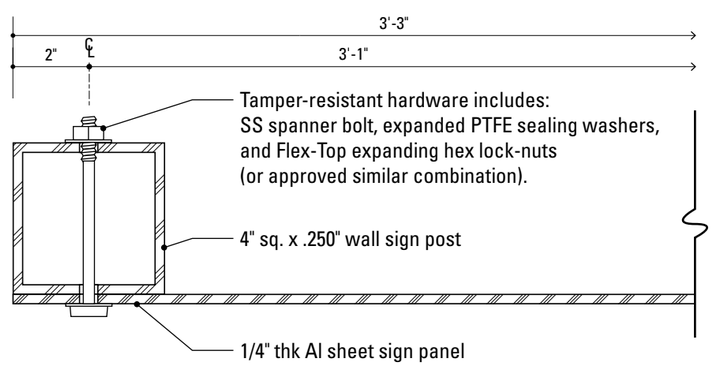

1 Section: PARK.2 Attachment Detail
SCALE: 3" = 1' -0"

SPECIFICATIONS

Construction Details
Sign Type:
PARK.2
PARK.5A
PARK.6

See Sheet E.19–20 for break-away system details.

DESIGN NOTE:
Final design and shop drawings shall be supplied by the fabricator. An Arizona registered engineer is required to sign and seal the submittal of shop drawings.

NOTES

1. Fabricator shall verify the mounting conditions and provide a detail drawing for each mounting situation, prior to fabrication. Fabricator shall obtain approval from the Designer or Client for placement prior to fabrication.
2. Welds: All welds shall be ground smooth, paint all seams.
3. Hardware: All fasteners shall be concealed. If exposed, hardware shall be tamper proof fasteners, corrosion resistant, and color matching adjacent surfaces.
4. All painted sign surfaces to receive UV/Anti-Graffiti spray coating. All sign surfaces with reflective graphics to receive 3M approved UV/Anti-Graffiti overlaminate.

ENVIRONMENTS & EXPERIENCES
merje
120 North Church Street
Suite 208
West Chester, PA 19380
T 484.266.0648
www.merjedesign.com

CLIENT / PROJECT
Lake Havasu City, AZ Wayfinding Program

PROJECT NO.

SUBCONSULTANT

DATE January 8, 2015
DRAWN BY: JC/PR

REVISIONS
February 10, 2015
August 2016

SHEET TITLE
PARK.2, PARK.5A & PARK.6 Section Details

SHEET NO.
E.8

These drawings are meant for DESIGN INTENT ONLY and are not for construction. Contractor shall verify and be responsible for all dimensions and conditions of the job. Contractor shall be familiar with the site and conditions it presents. This office must be notified of any variations from the dimensions and conditions shown on this drawing. Shop drawings and details must be submitted to this office for approval prior to proceeding with fabrication. All copy shall be proofread by client and legal requirements checked by legal department.

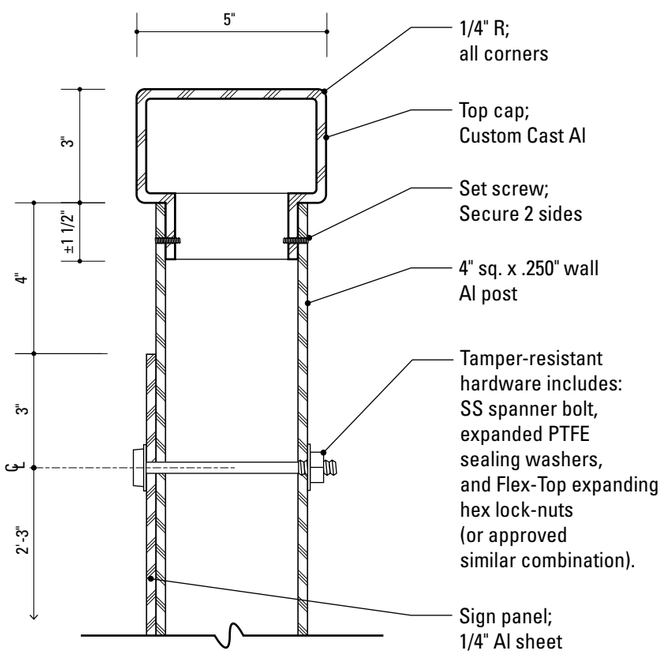

1 Square Top Detail: Side View
SCALE: 3" = 1' -0"

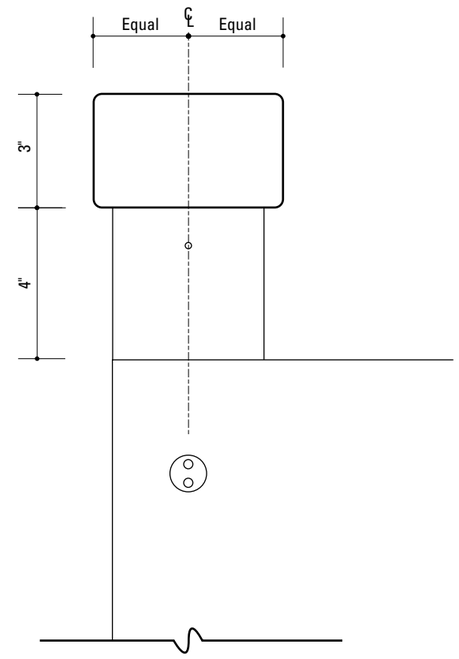

2 Square Top Detail: Front View
SCALE: 3" = 1' -0"

SPECIFICATIONS

Square Top Construction Details
Sign Type:
PARK.2
PARK.5A
PARK.6

See Sheet E.19–20 for break-away system details.

DESIGN NOTE:
Final design and shop drawings shall be supplied by the fabricator. An Arizona registered engineer is required to sign and seal the submittal of shop drawings.

NOTES

1. Fabricator shall verify the mounting conditions and provide a detail drawing for each mounting situation, prior to fabrication. Fabricator shall obtain approval from the Designer or Client for placement prior to fabrication.
2. Welds: All welds shall be ground smooth, paint all seams.
3. Hardware: All fasteners shall be concealed. If exposed, hardware shall be tamper proof fasteners, corrosion resistant, and color matching adjacent surfaces.
4. All painted sign surfaces to receive UV/Anti-Graffiti spray coating. All sign surfaces with reflective graphics to receive 3M approved UV/Anti-Graffiti overlaminate.

ENVIRONMENTS & EXPERIENCES
merje
120 North Church Street
Suite 208
West Chester, PA 19380
T 484.266.0648
www.merjedesign.com

CLIENT / PROJECT
Lake Havasu City, AZ
Wayfinding Program

PROJECT NO.

SUBCONSULTANT

DATE January 8, 2015

DRAWN BY: JC/PR

REVISIONS
February 10, 2015
August 2016

SHEET TITLE
Square Top
Section Details

SHEET NO.
E.9

These drawings are meant for DESIGN INTENT ONLY and are not for construction. Contractor shall verify and be responsible for all dimensions and conditions of the job. Contractor shall be familiar with the site and conditions it presents. This office must be notified of any variations from the dimensions and conditions shown on this drawing. Shop drawings and details must be submitted to this office for approval prior to proceeding with fabrication. All copy shall be proofread by client and legal requirements checked by legal department.

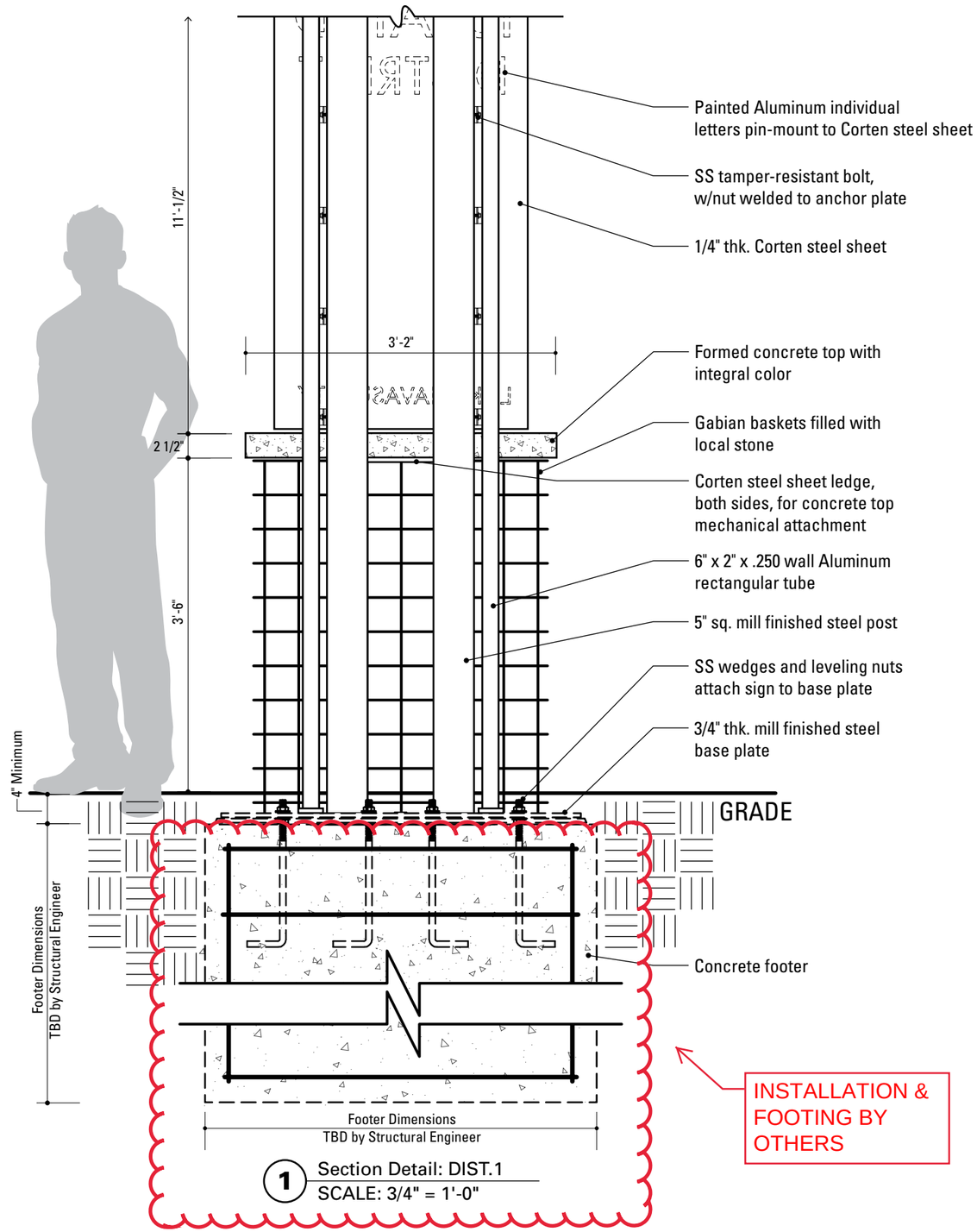

1 Section Detail: DIST.1
SCALE: 3/4" = 1'-0"

SPECIFICATIONS

Footer Details
Sign Types: DIST.1

The FABRICATOR shall be familiar with all site conditions and shall be responsible for all underground utility checks.

The FABRICATOR shall be familiar with all basement/vault locations by obtaining plans from the local municipality Department of Public Works. Where a basement/vault interferes with a proposed location. The sign shall be relocated to a location deemed appropriate by the municipalities Department of Public Works.

Where relocation is not an option the FABRICATOR will develop the appropriate mounting solution. The solution shall meet all engineering criteria as established by the standard footings (i.e. windloads).

FINAL DESIGNS AND SHOP DRAWINGS SHALL BE SUPPLIED BY THE FABRICATOR FOR EACH OF THE BREAK-AWAY POLES IDENTIFIED AND A ARIZONA REGISTERED PROFESSIONAL ENGINEER IS REQUIRED TO SIGN AND SEAL THE SUBMITTAL OF SHOP DRAWINGS.

NOTE:

1) SOIL IS AVERAGE WITH MAXIMUM ALLOWABLE SOIL PRESSURE OF 3,000 POUNDS PER SQUARE FOOT. SOIL UNIT WEIGHT OF 125 PCF AND FRICTION ANGLE OF 30 DEGREES (ASSUMED).

2) CONCRETE STRENGTH AT 28 DAYS F'C=4,000 PSI, REINFORCEMENT SHALL BE ASTM 36 FY=60,000 PSI.

3) FOLLOW 2009 ADOT DESIGN STANDARDS FOR MATERIAL AND CONSTRUCTION INFORMATION FOR THE SIGN POST BASES AND FOUNDATIONS NOT OTHERWISE SPECIFIED IN THESE CONTRACT DRAWINGS.

4) FOR SIGN POST SIZES REFER TO THE DESIGN INTENT DRAWING SHEETS.

DESIGN NOTE:
Final design and shop drawings shall be supplied by the fabricator. An Arizona registered engineer is required to sign and seal the submittal of shop drawings.

NOTES

1. Fabricator shall verify the mounting conditions and provide a detail drawing for each mounting situation, prior to fabrication. Fabricator shall obtain approval from the Designer or Client for placement prior to fabrication.
2. Welds: All welds shall be ground smooth, paint all seams.
3. Hardware: All fasteners shall be concealed. If exposed, hardware shall be tamper proof fasteners, corrosion resistant, and color matching adjacent surfaces.
4. All painted sign surfaces to receive UV/Anti-Graffiti spray coating. All sign surfaces with reflective graphics to receive 3M approved UV/Anti-Graffiti overlaminate.

ENVIRONMENTS & EXPERIENCES

merje

120 North Church Street
Suite 208
West Chester, PA 19380
T 484.266.0648
www.merjedesign.com

CLIENT / PROJECT

Lake Havasu City, AZ Wayfinding Program

PROJECT NO.

SUBCONSULTANT

SHEET TITLE

DIST.1 Footer Details

DATE January 8, 2015

DRAWN BY: JC/PR

REVISIONS

February 10, 2015

August 2016

These drawings are meant for DESIGN INTENT ONLY and are not for construction. Contractor shall verify and be responsible for all dimensions and conditions of the job. Contractor shall be familiar with the site and conditions it presents. This office must be notified of any variations from the dimensions and conditions shown on this drawing. Shop drawings and details must be submitted to this office for approval prior to proceeding with fabrication. All copy shall be proofread by client and legal requirements checked by legal department.

SHEET NO.

E.10

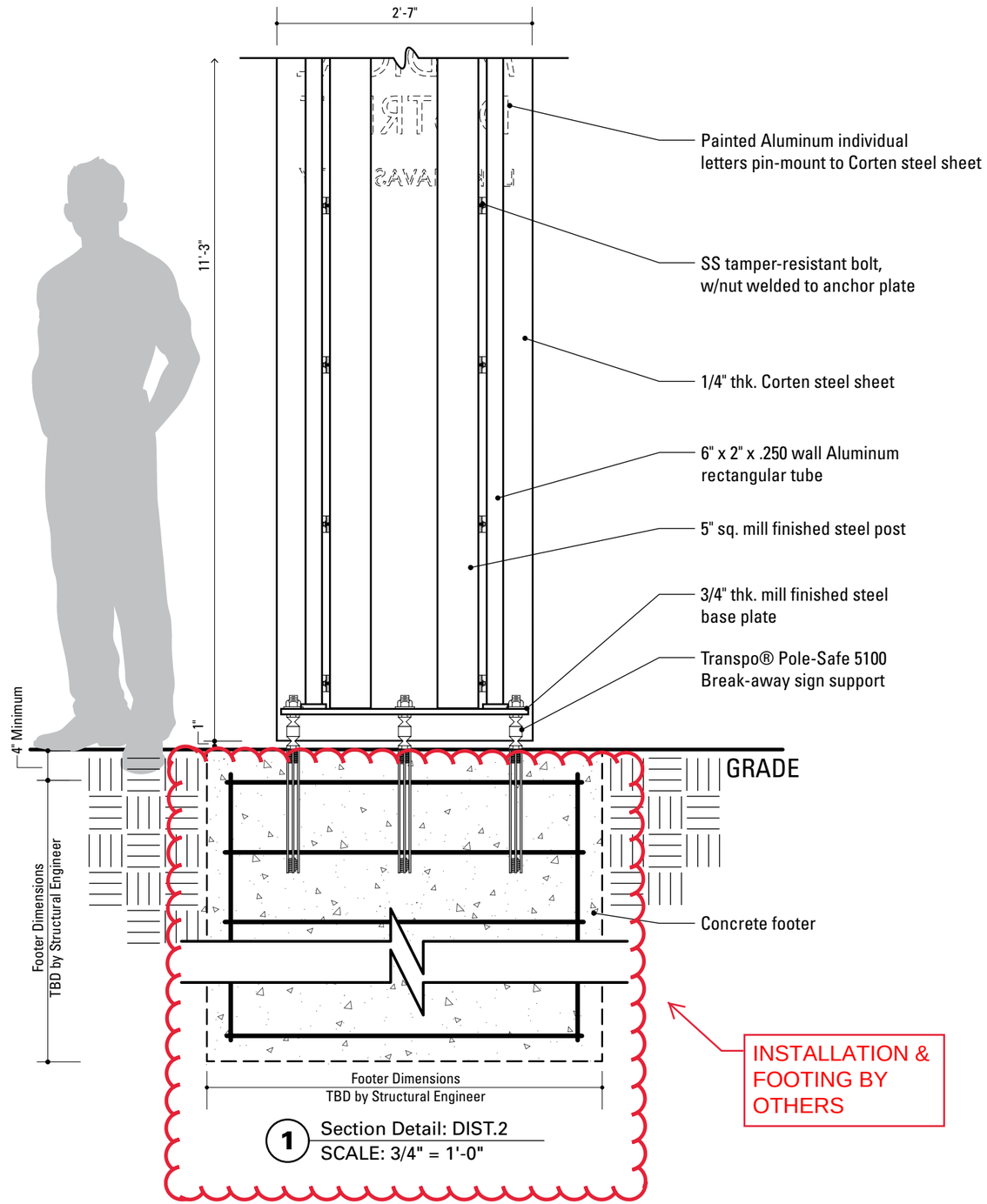

1 Section Detail: DIST.2
SCALE: 3/4" = 1'-0"

SPECIFICATIONS

Break-Away System Details
Footer Details
Transpo® Pole-Safe 5100
Sign Types: DIST.2

The FABRICATOR shall be familiar with all site conditions and shall be responsible for all underground utility checks.

The FABRICATOR shall be familiar with all basement/vault locations by obtaining plans from the local municipality Department of Public Works. Where a basement/vault interferes with a proposed location. The sign shall be relocated to a location deemed appropriate by the municipalities Department of Public Works.

Where relocation is not an option the FABRICATOR will develop the appropriate mounting solution. The solution shall meet all engineering criteria as established by the standard footings (i.e. windloads).

FINAL DESIGNS AND SHOP DRAWINGS SHALL BE SUPPLIED BY THE FABRICATOR FOR EACH OF THE BREAK-AWAY POLES IDENTIFIED AND A ARIZONA REGISTERED PROFESSIONAL ENGINEER IS REQUIRED TO SIGN AND SEAL THE SUBMITTAL OF SHOP DRAWINGS.

NOTE:

1) SOIL IS AVERAGE WITH MAXIMUM ALLOWABLE SOIL PRESSURE OF 3,000 POUNDS PER SQUARE FOOT. SOIL UNIT WEIGHT OF 125 PCF AND FRICTION ANGLE OF 30 DEGREES (ASSUMED).

2) CONCRETE STRENGTH AT 28 DAYS F'C=4,000 PSI, REINFORCEMENT SHALL BE ASTM 36 FY=60,000 PSI.

3) FOLLOW 2009 ADOT DESIGN STANDARDS FOR MATERIAL AND CONSTRUCTION INFORMATION FOR THE SIGN POST BASES AND FOUNDATIONS NOT OTHERWISE SPECIFIED IN THESE CONTRACT DRAWINGS.

4) FOR SIGN POST SIZES REFER TO THE DESIGN INTENT DRAWING SHEETS.

DESIGN NOTE:
Final design and shop drawings shall be supplied by the fabricator. An Arizona registered engineer is required to sign and seal the submittal of shop drawings.

NOTES

1. Fabricator shall verify the mounting conditions and provide a detail drawing for each mounting situation, prior to fabrication. Fabricator shall obtain approval from the Designer or Client for placement prior to fabrication.
2. Welds: All welds shall be ground smooth, paint all seams.
3. Hardware: All fasteners shall be concealed. If exposed, hardware shall be tamper proof fasteners, corrosion resistant, and color matching adjacent surfaces.
4. All painted sign surfaces to receive UV/Anti-Graffiti spray coating. All sign surfaces with reflective graphics to receive 3M approved UV/Anti-Graffiti overlaminate.

ENVIRONMENTS & EXPERIENCES
merje
120 North Church Street
Suite 208
West Chester, PA 19380
T 484.266.0648
www.merjedesign.com

CLIENT / PROJECT
Lake Havasu City, AZ
Wayfinding Program

PROJECT NO.

SUBCONSULTANT

DATE January 8, 2015

DRAWN BY: JC/PR

REVISIONS
February 10, 2015
August 2016

SHEET TITLE
DIST.2
Footer Details

SHEET NO.
E.11

These drawings are meant for DESIGN INTENT ONLY and are not for construction. Contractor shall verify and be responsible for all dimensions and conditions of the job. Contractor shall be familiar with the site and conditions it presents. This office must be notified of any variations from the dimensions and conditions shown on this drawing. Shop drawings and details must be submitted to this office for approval prior to proceeding with fabrication. All copy shall be proofread by client and legal requirements checked by legal department.

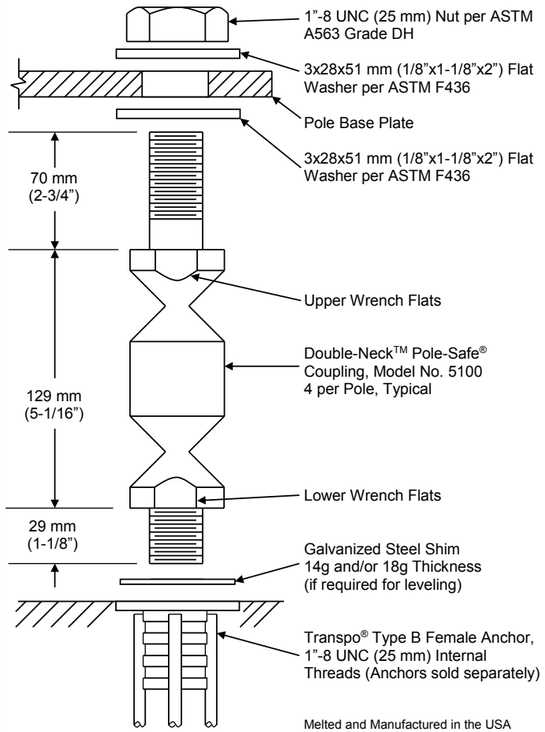

Melted and Manufactured in the USA
Patent Nos. 5,474,408 & 6,056,471 1/14

SPECIFICATIONS

Performance Criteria:

1. Double-Neck™ Pole-Safe® conforms to AASHTO "Standard Specifications for Structural Supports for Highway Signs, Luminaires and Traffic Signals."
2. Double-Neck™ Pole-Safe® has been crash-tested and FHWA approved in accordance with the requirements of NCHRP Report 350, "Recommended Procedures for the Safety Performance Evaluation of Highway Features."
3. Maximum Allowable Pole Mass = 450 kg (992 lb) (total, including fixtures).

Physical Properties per Coupling:

1. Ultimate Tensile Strength = 221.5 kN (49.8 kips), minimum.
2. Tensile Yield Strength = 192.0 kN (43.2 kips), minimum.
3. Ultimate Restrained Shear Strength = 16.9 kN (3.8 kips), minimum.
4. Ultimate Restrained Shear Strength = 24.4 kN (5.5 kips), maximum.

Corrosion Protection:

1. All Double-Neck™ Pole-Safe® couplings, nuts, bolts, and washers are galvanized after fabrication in accordance with ASTM A153. All leveling shims are galvanized after fabrication in accordance with ASTM A653.

Pole-Safe® Model No. 5100
Breakaway Support System for Light Poles

TRANSPO® INDUSTRIES, Inc. The Smart Solutions Company
20 Jones Street
New Rochelle, NY 10801
914-636-1000
www.transpo.com

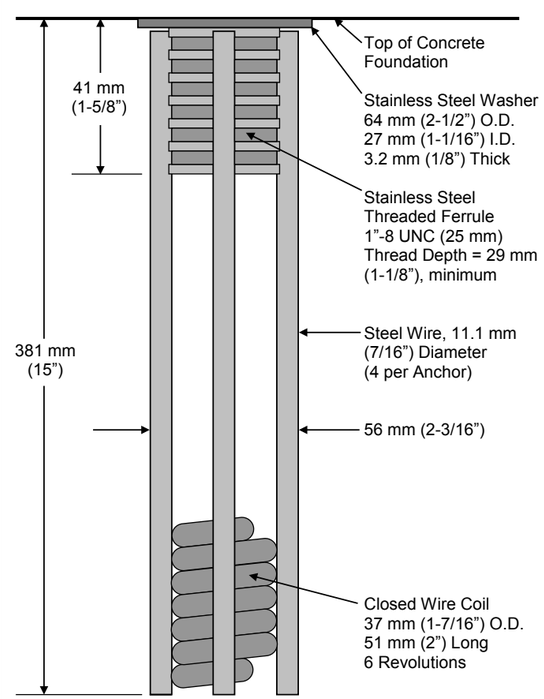

Melted and Manufactured in the USA 1/14

SPECIFICATIONS

Physical Properties:

1. Ultimate Tensile Load = 267 kN (60.0 kips) minimum per Anchor.
2. Actual Pullout Strength depends on foundation design and concrete properties.

Installation Instructions:

See other side of page for typical installation diagrams.

1. Fabricate flat steel or wood template with four (4) 25 mm (1") diameter holes located to match the specified bolt pattern of the Break-Safe brackets attached to the signpost.
2. Attach four (4) Break-Safe® Type B Female Anchors to template using four (4) 25 mm (1") diameter bolts. Ensure that each Anchor Washer is flush and snug against the bottom of the template.
3. Lower Anchor Assembly into fresh concrete foundation, and vibrate into position such that the tops of the Anchor Washers are flush with the finished top surface of the foundation.
4. Support template such that all Anchors are level and in their proper locations.
5. Allow concrete to cure, and then remove bolts and template from the top of the foundation.

Transpo® Type B Female Anchor
for use with Pole Safe® Model No. 5100 and 5125
Breakaway Support System for Light Poles

TRANSPO® INDUSTRIES, Inc. The Smart Solutions Company
20 Jones Street
New Rochelle, NY 10801
914-636-1000
www.transpo.com

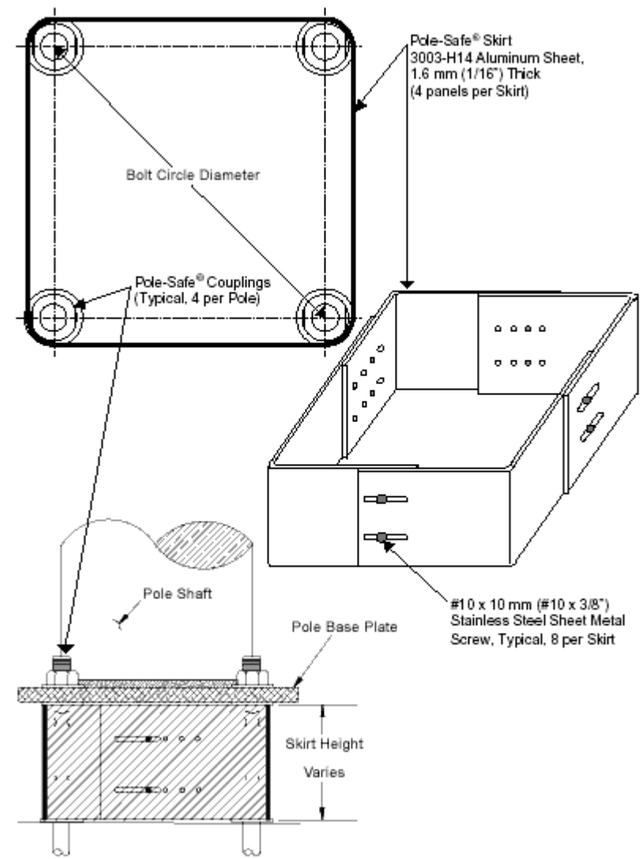

SPECIFICATIONS

Break-Away System Details
Transpo® Pole-Safe 5100
Transpo® Pole-Safe Skirt
Sign Types: VDIR.1–3-LEFT, DEST.1

The FABRICATOR shall be familiar with all site conditions and shall be responsible for all underground utility checks.

The FABRICATOR shall be familiar with all basement/vault locations by obtaining plans from the local municipality Department of Public Works. Where a basement/vault interferes with a proposed location. The sign shall be relocated to a location deemed appropriate by the municipalities Department of Public Works.

Where relocation is not an option the FABRICATOR will develop the appropriate mounting solution. The solution shall meet all engineering criteria as established by the standard footings (i.e. windloads).

FINAL DESIGNS AND SHOP DRAWINGS SHALL BE SUPPLIED BY THE FABRICATOR FOR EACH OF THE BREAK-AWAY POLES IDENTIFIED AND A ARIZONA REGISTERED PROFESSIONAL ENGINEER IS REQUIRED TO SIGN AND SEAL THE SUBMITTAL OF SHOP DRAWINGS.

NOTE:
1) SOIL IS AVERAGE WITH MAXIMUM ALLOWABLE SOIL PRESSURE OF 3,000 POUNDS PER SQUARE FOOT. SOIL UNIT WEIGHT OF 125 PCF AND FRICTION ANGLE OF 30 DEGREES (ASSUMED).
2) CONCRETE STRENGTH AT 28 DAYS F'C=4,000 PSI, REINFORCEMENT SHALL BE ASTM 36 FY=60,000 PSI.
3) FOLLOW 2009 ADOT DESIGN STANDARDS FOR MATERIAL AND CONSTRUCTION INFORMATION FOR THE SIGN POST BASES AND FOUNDATIONS NOT OTHERWISE SPECIFIED IN THESE CONTRACT DRAWINGS.
4) FOR SIGN POST SIZES REFER TO THE DESIGN INTENT DRAWING SHEETS.

DESIGN NOTE:
Final design and shop drawings shall be supplied by the fabricator. An Arizona registered engineer is required to sign and seal the submittal of shop drawings.

NOTES
1. Fabricator shall verify the mounting conditions and provide a detail drawing for each mounting situation, prior to fabrication. Fabricator shall obtain approval from the Designer or Client for placement prior to fabrication.
2. Welds: All welds shall be ground smooth, paint all seams.
3. Hardware: All fasteners shall be concealed. If exposed, hardware shall be tamper proof fasteners, corrosion resistant, and color matching adjacent surfaces.
4. All painted sign surfaces to receive UV/Anti-Graffiti spray coating. All sign surfaces with reflective graphics to receive 3M approved UV/Anti-Graffiti overlaminate.

ENVIRONMENTS & EXPERIENCES
merje
120 North Church Street
Suite 208
West Chester, PA 19380
T 484.266.0648
www.merjedesign.com

CLIENT / PROJECT
Lake Havasu City, AZ Wayfinding Program

PROJECT NO.

SUBCONSULTANT

DATE January 8, 2015
DRAWN BY: JC/PR

REVISIONS
February 10, 2015
August 2016

SHEET TITLE
Transpo® Pole-Safe 5100 Breakaway System Details

SHEET NO.
E.12

These drawings are meant for DESIGN INTENT ONLY and are not for construction. Contractor shall verify and be responsible for all dimensions and conditions of the job. Contractor shall be familiar with the site and conditions it presents. This office must be notified of any variations from the dimensions and conditions shown on this drawing. Shop drawings and details must be submitted to this office for approval prior to proceeding with fabrication. All copy shall be proofread by client and legal requirements checked by legal department.

Note: Design Wind load 300 PSF 90 MPH,
3 Sec Gust Wind, Exp C

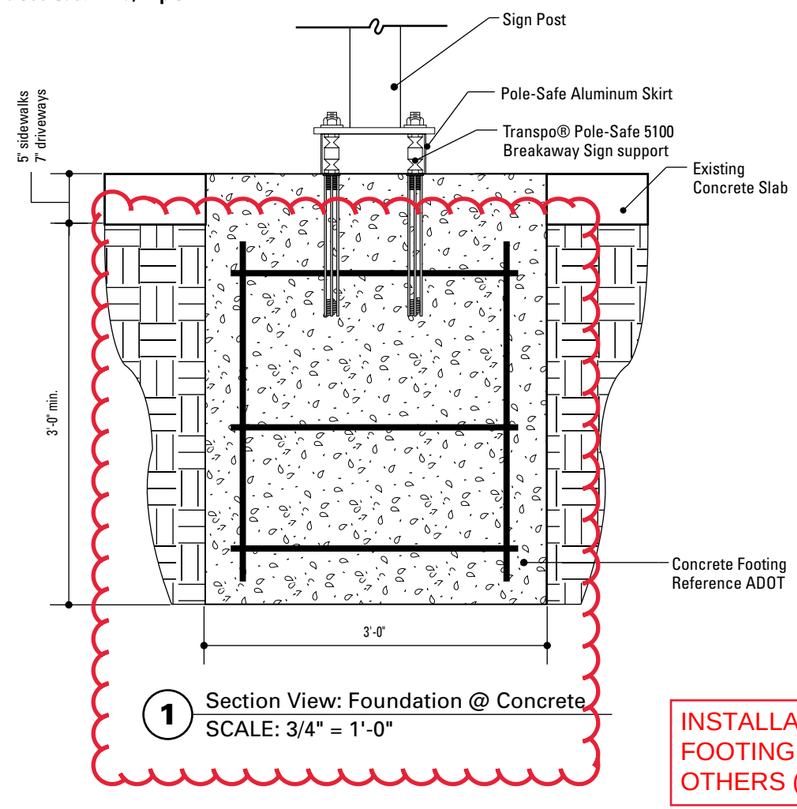

1 Section View: Foundation @ Concrete
SCALE: 3/4" = 1'-0"

INSTALLATION & FOOTING BY OTHERS (TYP.)

Note: Design Wind load 300 PSF 90 MPH,
3 Sec Gust Wind, Exp C

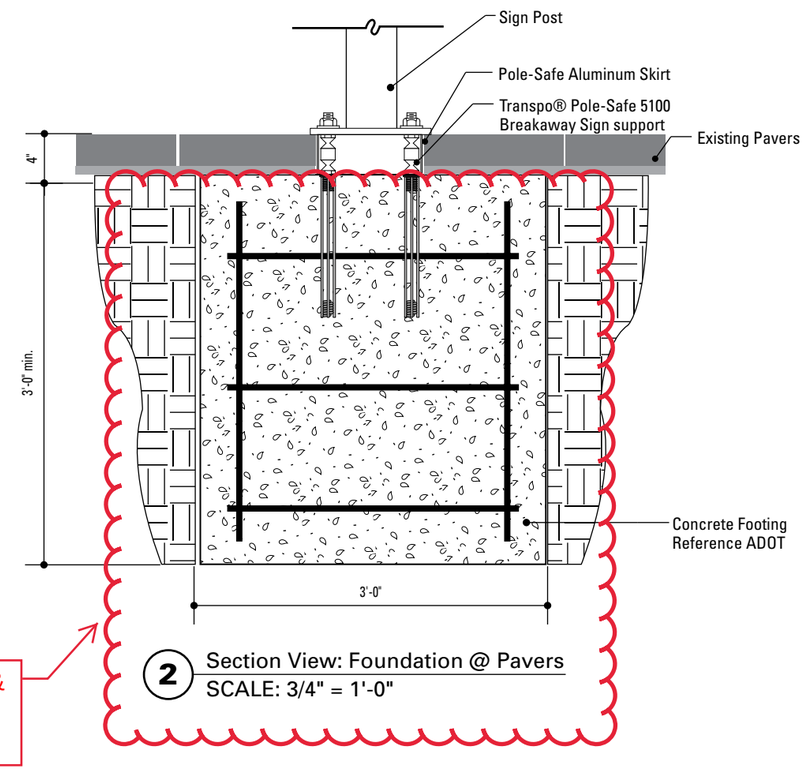

2 Section View: Foundation @ Pavers
SCALE: 3/4" = 1'-0"

Note: Design Wind load 300 PSF 90 MPH,
3 Sec Gust Wind, Exp C

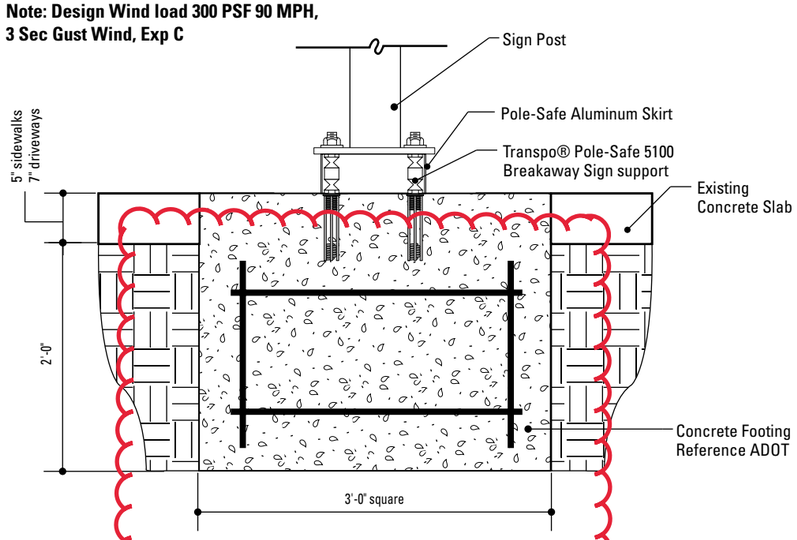

3 Section View: Foundation: Shallow Depth
SCALE: 3/4" = 1'-0"

Note: Design Wind load 300 PSF 90 MPH,
3 Sec Gust Wind, Exp C

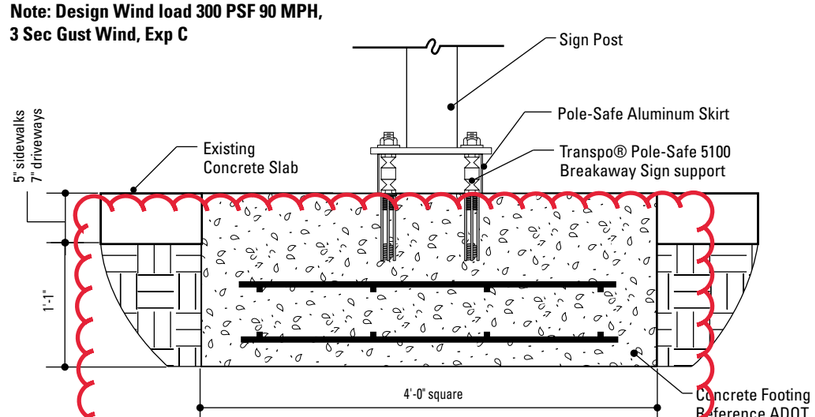

4 Section View: Foundation: Extremely Shallow Depth
SCALE: 3/4" = 1'-0"

SPECIFICATIONS

Footer Details
Transpo® Pole-Safe 5100
Transpo® Pole-Safe Skirt
Sign Types: VDIR.1–3-LEFT, DEST.1

The FABRICATOR shall be familiar with all site conditions and shall be responsible for all underground utility checks.

The FABRICATOR shall be familiar with all basement/vault locations by obtaining plans from the local municipality Department of Public Works. Where a basement/vault interferes with a proposed location. The sign shall be relocated to a location deemed appropriate by the municipalities Department of Public Works.

Where relocation is not an option the FABRICATOR will develop the appropriate mounting solution. The solution shall meet all engineering criteria as established by the standard footings (i.e. windloads).

FINAL DESIGNS AND SHOP DRAWINGS SHALL BE SUPPLIED BY THE FABRICATOR FOR EACH OF THE BREAK-AWAY POLES IDENTIFIED AND A ARIZONA REGISTERED PROFESSIONAL ENGINEER IS REQUIRED TO SIGN AND SEAL THE SUBMITTAL OF SHOP DRAWINGS.

NOTE:
1) SOIL IS AVERAGE WITH MAXIMUM ALLOWABLE SOIL PRESSURE OF 3,000 POUNDS PER SQUARE FOOT. SOIL UNIT WEIGHT OF 125 PCF AND FRICTION ANGLE OF 30 DEGREES (ASSUMED).

2) CONCRETE STRENGTH AT 28 DAYS F'C=4,000 PSI, REINFORCEMENT SHALL BE ASTM 36 FY=60,000 PSI.

3) FOLLOW 2009 ADOT DESIGN STANDARDS FOR MATERIAL AND CONSTRUCTION INFORMATION FOR THE SIGN POST BASES AND FOUNDATIONS NOT OTHERWISE SPECIFIED IN THESE CONTRACT DRAWINGS.

4) FOR SIGN POST SIZES REFER TO THE DESIGN INTENT DRAWING SHEETS.

DESIGN NOTE:
Final design and shop drawings shall be supplied by the fabricator. An Arizona registered engineer is required to sign and seal the submittal of shop drawings.

NOTES
1. Fabricator shall verify the mounting conditions and provide a detail drawing for each mounting situation, prior to fabrication. Fabricator shall obtain approval from the Designer or Client for placement prior to fabrication.
2. Welds: All welds shall be ground smooth, paint all seams.
3. Hardware: All fasteners shall be concealed. If exposed, hardware shall be tamper proof fasteners, corrosion resistant, and color matching adjacent surfaces.
4. All painted sign surfaces to receive UV/Anti-Graffiti spray coating. All sign surfaces with reflective graphics to receive 3M approved UV/Anti-Graffiti overlaminate.

ENVIRONMENTS & EXPERIENCES
merje
120 North Church Street
Suite 208
West Chester, PA 19380
T 484.266.0648
www.merjedesign.com

CLIENT / PROJECT
Lake Havasu City, AZ
Wayfinding Program

PROJECT NO.

SUBCONSULTANT

DATE January 8, 2015

DRAWN BY: JC/PR

REVISIONS
February 10, 2015
August 2016

SHEET TITLE
Transpo® Pole-Safe 5100 Breakaway System Details

SHEET NO.
E.13

These drawings are meant for DESIGN INTENT ONLY and are not for construction. Contractor shall verify and be responsible for all dimensions and conditions of the job. Contractor shall be familiar with the site and conditions it presents. This office must be notified of any variations from the dimensions and conditions shown on this drawing. Shop drawings and details must be submitted to this office for approval prior to proceeding with fabrication. All copy shall be proofread by client and legal requirements checked by legal department.

INSTALLATION & FOOTING BY OTHERS

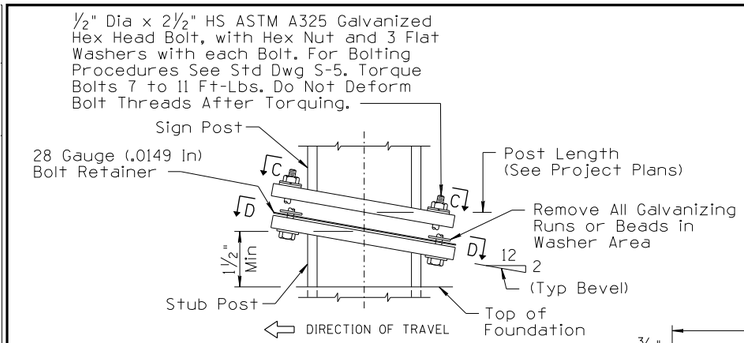

SIGN POST AND STUB POST ELEVATION

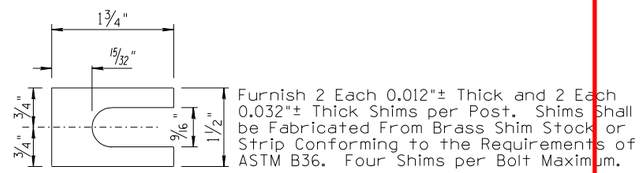

SHIM DETAIL

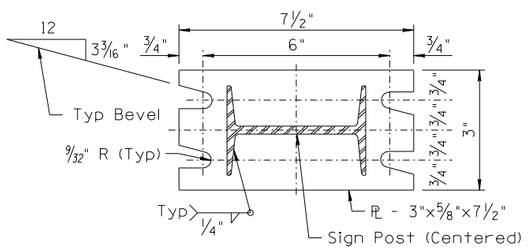

SECTION C-C

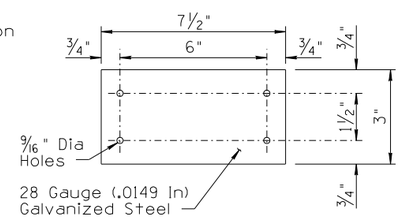

BOLT RETAINER

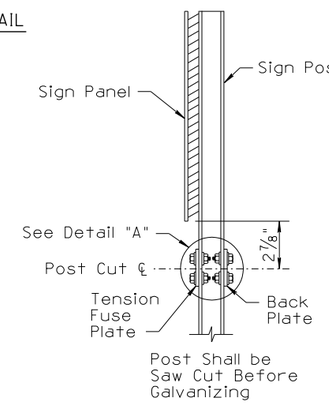

SIDE VIEW OF POST

FOOTER DETAIL

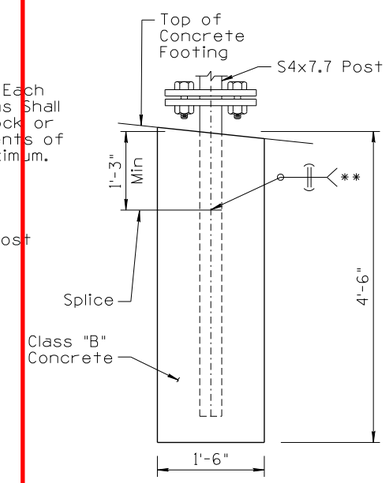

PERMISSIBLE SHOP SPLICE

All shop splices shall be approved by the Engineer. All welding shall be in accordance with AWS-1.1 latest edition.

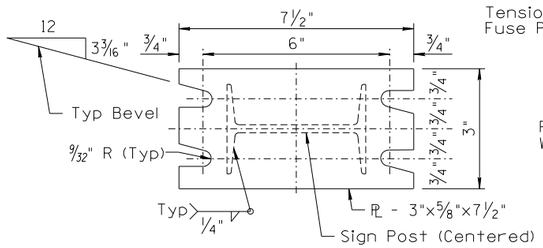

SECTION D-D

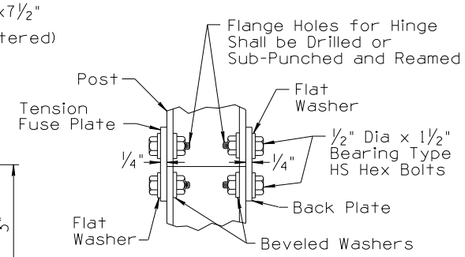

DETAIL "A" HINGE

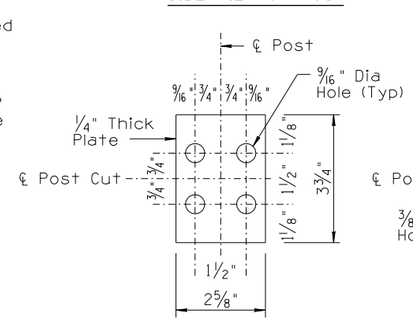

BACK PLATE

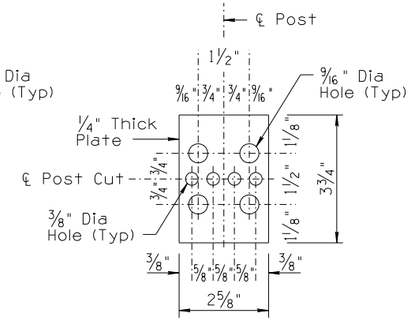

TENSION FUSE PLATE

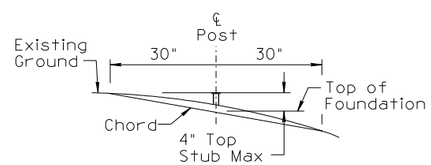

STUB PROJECTION LIMITS

NOTES:

1. Sections shown are for installations on right shoulder and in gore. For installations on left shoulder, plate slot bevels are reversed.
2. All plates shall be ASTM A572 grade 50. All plate holes shall be drilled. All plate cuts shall preferably be saw cuts; flame cutting will be permitted provided all edges are ground.

NOT TO SCALE

DESIGN APPROVED	ARIZONA DEPARTMENT OF TRANSPORTATION INTERMODAL TRANSPORTATION DIVISION TRAFFIC SIGNING & MARKING STANDARD DRAWINGS	REVISION 6/14
SIGNATURES		DRAWING NO. S-6
APPROVED FOR DISTRIBUTION ON FILE	BREAKAWAY S4x7.7 POST DETAILS	SHEET NO. 1 OF 1

5:14:29 PM 6/3/2014 V:\Traffic\Dev\tr_dev\english_stds\sign_mark\current_stds\S-06.dgn

SPECIFICATIONS

Break-Away System Details
ADOT Breakaway S4x7.7
Sign Types: VDIR.4–6

The FABRICATOR shall be familiar with all site conditions and shall be responsible for all underground utility checks.

The FABRICATOR shall be familiar with all basement/vault locations by obtaining plans from the local municipality Department of Public Works. Where a basement/vault interferes with a proposed location. The sign shall be relocated to a location deemed appropriate by the municipalities Department of Public Works.

Where relocation is not an option the FABRICATOR will develop the appropriate mounting solution. The solution shall meet all engineering criteria as established by the standard footings (i.e. windloads).

FINAL DESIGNS AND SHOP DRAWINGS SHALL BE SUPPLIED BY THE FABRICATOR FOR EACH OF THE BREAK-AWAY POLES IDENTIFIED AND A ARIZONA REGISTERED PROFESSIONAL ENGINEER IS REQUIRED TO SIGN AND SEAL THE SUBMITTAL OF SHOP DRAWINGS.

NOTE:

1) SOIL IS AVERAGE WITH MAXIMUM ALLOWABLE SOIL PRESSURE OF 3,000 POUNDS PER SQUARE FOOT. SOIL UNIT WEIGHT OF 125 PCF AND FRICTION ANGLE OF 30 DEGREES (ASSUMED).

2) CONCRETE STRENGTH AT 28 DAYS F'C=4,000 PSI, REINFORCEMENT SHALL BE ASTM 36 FY=60,000 PSI.

3) FOLLOW 2009 ADOT DESIGN STANDARDS FOR MATERIAL AND CONSTRUCTION INFORMATION FOR THE SIGN POST BASES AND FOUNDATIONS NOT OTHERWISE SPECIFIED IN THESE CONTRACT DRAWINGS.

4) FOR SIGN POST SIZES REFER TO THE DESIGN INTENT DRAWING SHEETS.

DESIGN NOTE:
Final design and shop drawings shall be supplied by the fabricator. An Arizona registered engineer is required to sign and seal the submittal of shop drawings.

NOTES

1. Fabricator shall verify the mounting conditions and provide a detail drawing for each mounting situation, prior to fabrication. Fabricator shall obtain approval from the Designer or Client for placement prior to fabrication.
2. Welds: All welds shall be ground smooth, paint all seams.
3. Hardware: All fasteners shall be concealed. If exposed, hardware shall be tamper proof fasteners, corrosion resistant, and color matching adjacent surfaces.
4. All painted sign surfaces to receive UV/Anti-Graffiti spray coating. All sign surfaces with reflective graphics to receive 3M approved UV/Anti-Graffiti overlaminate.

ENVIRONMENTS & EXPERIENCES
merje
120 North Church Street
Suite 208
West Chester, PA 19380
T 484.266.0648
www.merjedesign.com

CLIENT / PROJECT
Lake Havasu City, AZ Wayfinding Program

PROJECT NO.

SUBCONSULTANT

DATE January 8, 2015

DRAWN BY: JC/PR

REVISIONS
February 10, 2015
August 2016

SHEET TITLE
ADOT Breakaway S4x7.7 System Details

SHEET NO.
E.14

These drawings are meant for DESIGN INTENT ONLY and are not for construction. Contractor shall verify and be responsible for all dimensions and conditions of the job. Contractor shall be familiar with the site and conditions it presents. This office must be notified of any variations from the dimensions and conditions shown on this drawing. Shop drawings and details must be submitted to this office for approval prior to proceeding with fabrication. All copy shall be proofread by client and legal requirements checked by legal department.

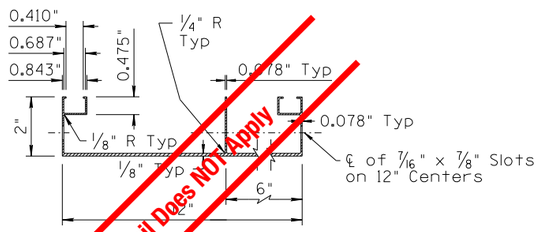

Weight per linear ft = 2.69 Lbs Minimum 12" Extrusion

SECTION VIEW OF EXTRUSION

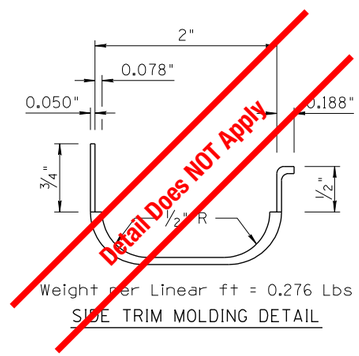

Weight per Linear ft = 0.276 Lbs

SIDE TRIM MOLDING DETAIL

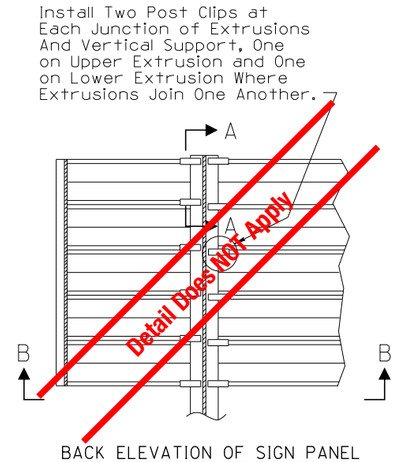

BACK ELEVATION OF SIGN PANEL

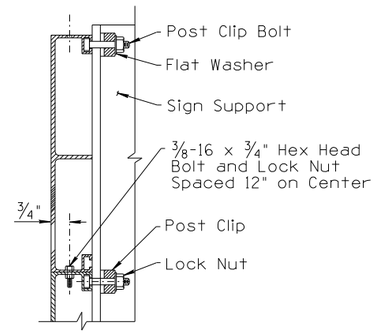

SECTION A-A
INSTALLATION DETAIL

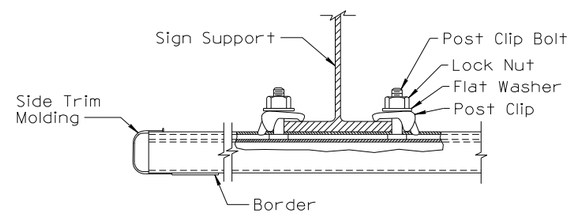

SECTION B-B
INSTALLATION DETAIL

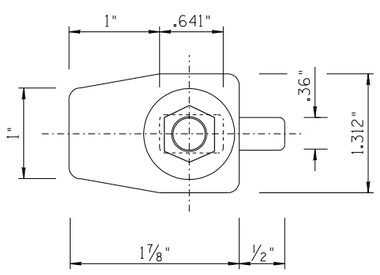

PLAN

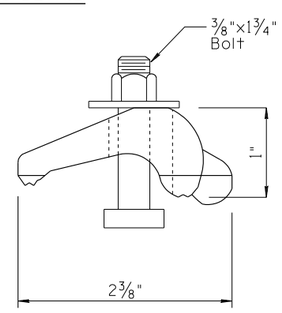

ELEVATION

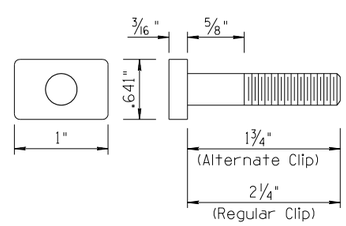

POST CLIP BOLT DETAIL

NOTE:

All bolts, washers and lock nuts shall be aluminum alloy, stainless steel, or plated steel.

NOT TO SCALE

DESIGN APPROVED SIGNATURES	ARIZONA DEPARTMENT OF TRANSPORTATION INTERMODAL TRANSPORTATION DIVISION TRAFFIC SIGNING & MARKING STANDARD DRAWINGS	REVISION 6/14 DRAWING NO. S-7
APPROVED FOR DISTRIBUTION ON FILE	ALUMINUM EXTRUSION SIGN PANEL DETAILS	SHEET NO. 1 of 3

5:22:40 PM 6/3/2014 V:\Traffic\Dev\tr_dev\english_stds\sign_mark\current_stds\S-07a.dgn

SPECIFICATIONS

Break-Away System Details
ADOT Breakaway S4x7.7
Sign Types: VDIR.4–6

The FABRICATOR shall be familiar with all site conditions and shall be responsible for all underground utility checks.

The FABRICATOR shall be familiar with all basement/vault locations by obtaining plans from the local municipality Department of Public Works. Where a basement/vault interferes with a proposed location. The sign shall be relocated to a location deemed appropriate by the municipalities Department of Public Works.

Where relocation is not an option the FABRICATOR will develop the appropriate mounting solution. The solution shall meet all engineering criteria as established by the standard footings (i.e. windloads).

FINAL DESIGNS AND SHOP DRAWINGS SHALL BE SUPPLIED BY THE FABRICATOR FOR EACH OF THE BREAK-AWAY POLES IDENTIFIED AND A ARIZONA REGISTERED PROFESSIONAL ENGINEER IS REQUIRED TO SIGN AND SEAL THE SUBMITTAL OF SHOP DRAWINGS.

NOTE:

1) SOIL IS AVERAGE WITH MAXIMUM ALLOWABLE SOIL PRESSURE OF 3,000 POUNDS PER SQUARE FOOT. SOIL UNIT WEIGHT OF 125 PCF AND FRICTION ANGLE OF 30 DEGREES (ASSUMED).

2) CONCRETE STRENGTH AT 28 DAYS F'C=4,000 PSI, REINFORCEMENT SHALL BE ASTM 36 FY=60,000 PSI.

3) FOLLOW 2009 ADOT DESIGN STANDARDS FOR MATERIAL AND CONSTRUCTION INFORMATION FOR THE SIGN POST BASES AND FOUNDATIONS NOT OTHERWISE SPECIFIED IN THESE CONTRACT DRAWINGS.

4) FOR SIGN POST SIZES REFER TO THE DESIGN INTENT DRAWING SHEETS.

DESIGN NOTE:
Final design and shop drawings shall be supplied by the fabricator. An Arizona registered engineer is required to sign and seal the submittal of shop drawings.

NOTES

1. Fabricator shall verify the mounting conditions and provide a detail drawing for each mounting situation, prior to fabrication. Fabricator shall obtain approval from the Designer or Client for placement prior to fabrication.
2. Welds: All welds shall be ground smooth, paint all seams.
3. Hardware: All fasteners shall be concealed. If exposed, hardware shall be tamper proof fasteners, corrosion resistant, and color matching adjacent surfaces.
4. All painted sign surfaces to receive UV/Anti-Graffiti spray coating. All sign surfaces with reflective graphics to receive 3M approved UV/Anti-Graffiti overlaminate.

ENVIRONMENTS & EXPERIENCES
merje
120 North Church Street
Suite 208
West Chester, PA 19380
T 484.266.0648
www.merjedesign.com

CLIENT / PROJECT
Lake Havasu City, AZ Wayfinding Program

PROJECT NO.

SUBCONSULTANT

SHEET TITLE
ADOT Breakaway S4x7.7 System Details

DATE January 8, 2015

DRAWN BY: JC/PR

REVISIONS
February 10, 2015
August 2016

SHEET NO.
E.15

These drawings are meant for DESIGN INTENT ONLY and are not for construction. Contractor shall verify and be responsible for all dimensions and conditions of the job. Contractor shall be familiar with the site and conditions it presents. This office must be notified of any variations from the dimensions and conditions shown on this drawing. Shop drawings and details must be submitted to this office for approval prior to proceeding with fabrication. All copy shall be proofread by client and legal requirements checked by legal department.

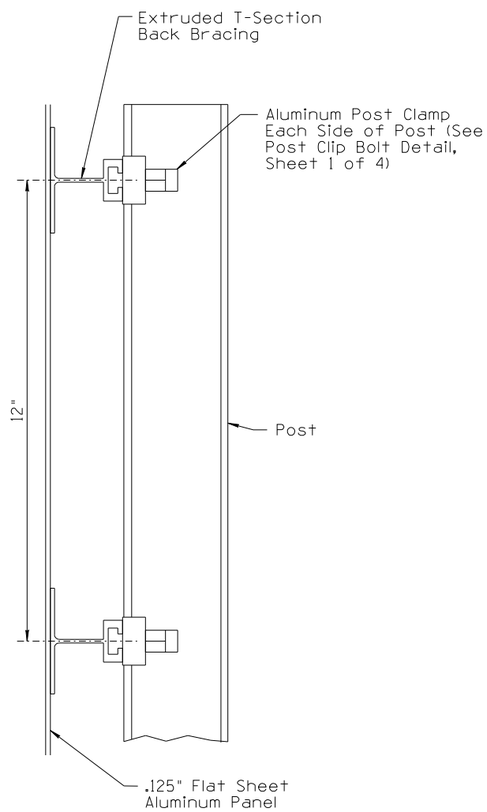

PANEL DETAIL

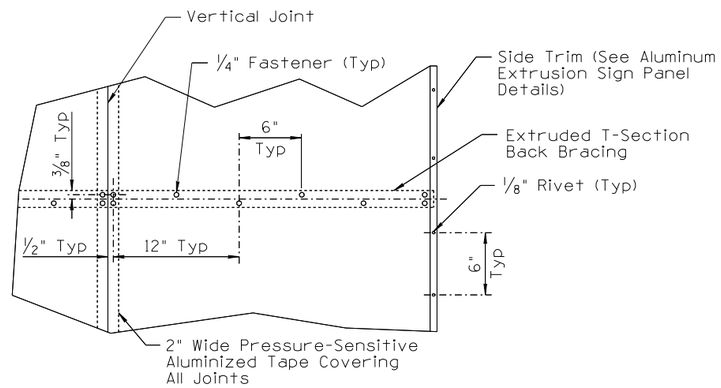

RIVET SPACING DETAIL

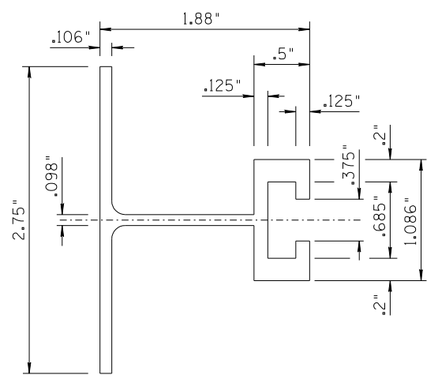

EXTRUDED T-SECTION BACK BRACING

NOTES:

1. The use of flat sheet aluminum panels on "S" and "W" posts shall be reserved for special circumstances and shall require the approval of ADOT Traffic Design and ADOT Traffic Operations.
2. Signs less than 60" high and 120" wide shall be made of a single sheet of aluminum.
3. Signs over 120" high may have horizontal and vertical joints; however, no sheet shall be less than 24" wide or 24" high.
4. All horizontal joints shall occur at extruded T-sections.
5. All screws, bolts, and lock washers shall be aluminum alloy, stainless steel, or plated steel.
6. All rivets shall be aluminum.
7. Vertical and horizontal joints are to be butt jointed and not overlapped.
8. All dimensions are in inches.

NOT TO SCALE

DESIGN APPROVED SIGNATURES	ARIZONA DEPARTMENT OF TRANSPORTATION INTERMODAL TRANSPORTATION DIVISION TRAFFIC SIGNING & MARKING STANDARD DRAWINGS	REVISION 6/14 DRAWING NO. S-8
APPROVED FOR DISTRIBUTION ON FILE	FLAT SHEET ALUMINUM PANEL ON BREAKAWAY POSTS INSTALLATION DETAIL	SHEET NO. 1 of 2

6:00:56 PM 6/3/2014 V:\Traffic\Dev\tr_dev\english_stds\sign_mark\current_stds\S-08a.dgn

SPECIFICATIONS

Break-Away System Details
ADOT Breakaway S4x7.7
Sign Types: VDIR.4–6

The FABRICATOR shall be familiar with all site conditions and shall be responsible for all underground utility checks.

The FABRICATOR shall be familiar with all basement/vault locations by obtaining plans from the local municipality Department of Public Works. Where a basement/vault interferes with a proposed location. The sign shall be relocated to a location deemed appropriate by the municipalities Department of Public Works.

Where relocation is not an option the FABRICATOR will develop the appropriate mounting solution. The solution shall meet all engineering criteria as established by the standard footings (i.e. windloads).

FINAL DESIGNS AND SHOP DRAWINGS SHALL BE SUPPLIED BY THE FABRICATOR FOR EACH OF THE BREAK-AWAY POLES IDENTIFIED AND A ARIZONA REGISTERED PROFESSIONAL ENGINEER IS REQUIRED TO SIGN AND SEAL THE SUBMITTAL OF SHOP DRAWINGS.

NOTE:
1) SOIL IS AVERAGE WITH MAXIMUM ALLOWABLE SOIL PRESSURE OF 3,000 POUNDS PER SQUARE FOOT. SOIL UNIT WEIGHT OF 125 PCF AND FRICTION ANGLE OF 30 DEGREES (ASSUMED).

2) CONCRETE STRENGTH AT 28 DAYS F'C=4,000 PSI, REINFORCEMENT SHALL BE ASTM 36 FY=60,000 PSI.

3) FOLLOW 2009 ADOT DESIGN STANDARDS FOR MATERIAL AND CONSTRUCTION INFORMATION FOR THE SIGN POST BASES AND FOUNDATIONS NOT OTHERWISE SPECIFIED IN THESE CONTRACT DRAWINGS.

4) FOR SIGN POST SIZES REFER TO THE DESIGN INTENT DRAWING SHEETS.

DESIGN NOTE:
Final design and shop drawings shall be supplied by the fabricator. An Arizona registered engineer is required to sign and seal the submittal of shop drawings.

NOTES
1. Fabricator shall verify the mounting conditions and provide a detail drawing for each mounting situation, prior to fabrication. Fabricator shall obtain approval from the Designer or Client for placement prior to fabrication.
2. Welds: All welds shall be ground smooth, paint all seams.
3. Hardware: All fasteners shall be concealed. If exposed, hardware shall be tamper proof fasteners, corrosion resistant, and color matching adjacent surfaces.
4. All painted sign surfaces to receive UV/Anti-Graffiti spray coating. All sign surfaces with reflective graphics to receive 3M approved UV/Anti-Graffiti overlaminate.

ENVIRONMENTS & EXPERIENCES
merje
120 North Church Street
Suite 208
West Chester, PA 19380
T 484.266.0648
www.merjedesign.com

CLIENT / PROJECT
Lake Havasu City, AZ Wayfinding Program

PROJECT NO.

SUBCONSULTANT

DATE January 8, 2015

DRAWN BY: JC/PR

REVISIONS
February 10, 2015
August 2016

SHEET TITLE
ADOT Breakaway S4x7.7 System Details

SHEET NO.
E.16

These drawings are meant for DESIGN INTENT ONLY and are not for construction. Contractor shall verify and be responsible for all dimensions and conditions of the job. Contractor shall be familiar with the site and conditions it presents. This office must be notified of any variations from the dimensions and conditions shown on this drawing. Shop drawings and details must be submitted to this office for approval prior to proceeding with fabrication. All copy shall be proofread by client and legal requirements checked by legal department.

PARTS LIST

ITEM	DESCRIPTION	SIZE/SPECIFICATIONS	QTY/ POST	PART NUMBER
1	Bracket, Type AP3, AP3.5, AP4, AP4.5	6061-T6 Aluminum	2	SBAK6172, 6173, 6174
2	Bracket Adaptor, Type AP3, AP3.5, AP4, AP4.5	6061-T6 Aluminum	2	SBADP30, 35, 40, 45
3	Bracket Hardware Assembly, Type AP3, AP3.5, AP4, AP4.5, includes:		1	SB-AP3H, 3.5H, 4.5H
3a	Bolt	12.7mm(1/2")-13UNC, Hex Head, ASTM A325, Galv. ASTM A153	4	
3b	LockWasher	12.7mm(1/2"), ANSI B18-21-1, Galv. ASTM A153	4	
3c	Nut	12.7mm(1/2")-13UNC, Heavy Hex, ASTM A563 Gr. DH, Galv. ASTM A153	4	
4	Coupling & Special Bolt Assembly, Type A, includes:		1	SB-CALP
4a	Special Bolt	15.9mm(5/8")-11UNC, ASTM A449, Galv. ASTM A153/B695	4	
4b	Coupling	15.9mm(5/8")-11UNC, LP, AMS 6378D, Galv. ASTM A153, Polyester Coat	4	
4c	Shim	15.9mm(5/8") Horseshoe, 14 Gauge, Galv. Steel Sheet	2	
4d	Shim	15.9mm(5/8") Horseshoe, 18 Gauge, Galv. Steel Sheet	2	
5	Anchor Assembly, Type A, includes:		1	SBAAPK
5a	Anchor	15.9mm(5/8")-11UNC, 304 S.S. Ferrule, AISI 1045 Rod, AISI 1008 Coil	4	

BREAK-SAFE MODEL AP SELECTION TABLE

BREAK-SAFE MODEL	OUTSIDE PIPE DIAMETER (D)	NOMINAL SCH. 40 PIPE SIZE
AP3	76 mm (3")	-
AP3.5	89 mm (3-1/2")	76 mm (3")
AP4	102 mm (4")	89 mm (3-1/2")
AP4.5	114 mm (4-1/2")	102 mm (4")

GENERAL NOTES:

1. Break-Safe meets all requirements of "AASHTO Standard Specifications for Structural Supports for Highway Signs, Luminaires and Traffic Signals."
2. Break-Safe Model AP is designed to fit steel or aluminum round pipe signposts. See table above for pipe sizes.
3. All hardware items are American Standard sizes, galvanized in accordance with ASTM A153 (hot dipped) or ASTM B695 (mechanically applied).
4. Fasteners, except for special bolt and coupling, are installed with lockwashers, and do not have specific torque requirements. Fasteners should be secured as tight as possible with conventional wrenches, unless noted otherwise.
5. Square-up and level individual components, particularly Anchors to minimize the need for shimming between the Couplings and Anchors.
6. No more than two shims shall be placed under any one coupling. No more than three shims underneath any pair of couplings.
7. Refer to other side of page for complete installation instructions.

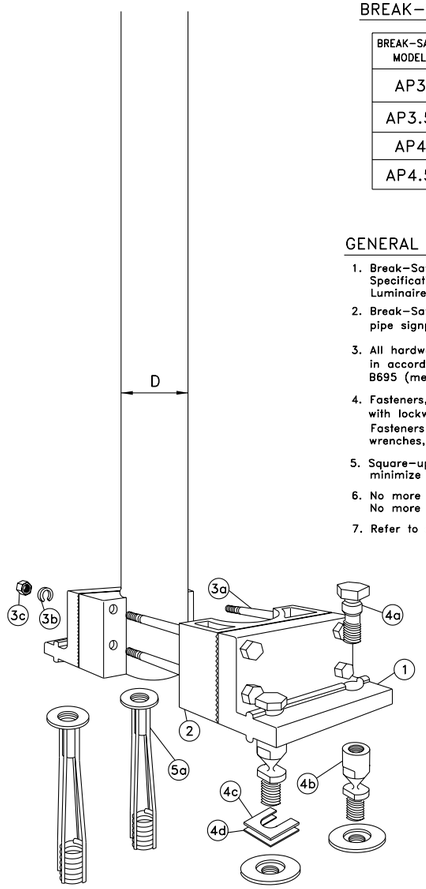

TRANSPO® INDUSTRIES, Inc. The Smart Solutions Company
20 Jones Street
New Rochelle, NY 10801
914-636-1000
www.transpo.com

Break-Safe Model AP
Breakaway Support System for Sign Posts

Scale: Not To Scale | Date: November 2000
Drawing No. BS-AP-1 | Sheet: 1 of 2

Patent Nos. 4,528,786 and 5,596,845

INSTALLATION INSTRUCTIONS

ANCHOR ASSEMBLY:

Note: Precise positioning of the anchors is critical to proper assembly of the system. It is recommended that actual posts be used to locate the correct postion of the anchors.

1. Fabricate a flat, rigid template with four (4) 16mm (5/8") diameter holes located to match the specified anchor pattern of the Break-Safe Brackets attached to the signpost. See diagram below.
2. Attach four (4) Transpo Type A Female Anchors to the template using four (4) 16mm (5/8") diameter bolts. Ensure that each Anchor Washer is snug against the bottom of the template.
3. Lower Anchor Assembly into fresh concrete foundation, and vibrate into position such that the tops of the Anchor Washers are flush with the finished top surface of the foundation. Support the template such that all Anchors are level and in their proper locations.
4. Allow concrete to cure, and then remove the bolts and template from the top of the foundation.

BRACKET ASSEMBLY:

1. Place Bracket Adaptors and Brackets squarely on the bottom of the post, such that the lower end of the post is flush with the bottom of both Bracket Adaptors.
2. Secure the Bracket assembly with bolts, lock washers, and nuts. Then, tighten all 1/2 turn beyond snug.

COUPLING ASSEMBLY:

1. Thread four (4) Break-Safe Couplings into Anchors. Do not tighten.
2. Suspend post assembly over foundation, insert Special Bolts through holes in the Brackets, and thread them snug into the Couplings.
3. If post is not plumb, insert Shims (14g and/or 18g) between the Couplings and Anchors, where needed.
4. Use lower wrench flats to tighten Couplings into Anchors as tight as possible using a conventional wrench. Do not use a pipe wrench. Couplings must be seated squarely.
5. Tighten Special Bolts while holding Couplings by the upper wrench flats with an additional wrench to prevent an induced torque stress across the necked portion of the Coupling. All Special Bolts shall also be tightened as tight as possible using conventional wrenches.

SIGN PANEL ASSEMBLY:

1. After all signposts are secured in place, attach sign panel assembly to posts in accordance with the sign manufacturer's recommendations.

PLAN VIEW OF TYPICAL FOUNDATION

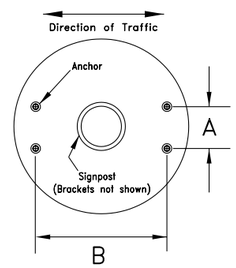

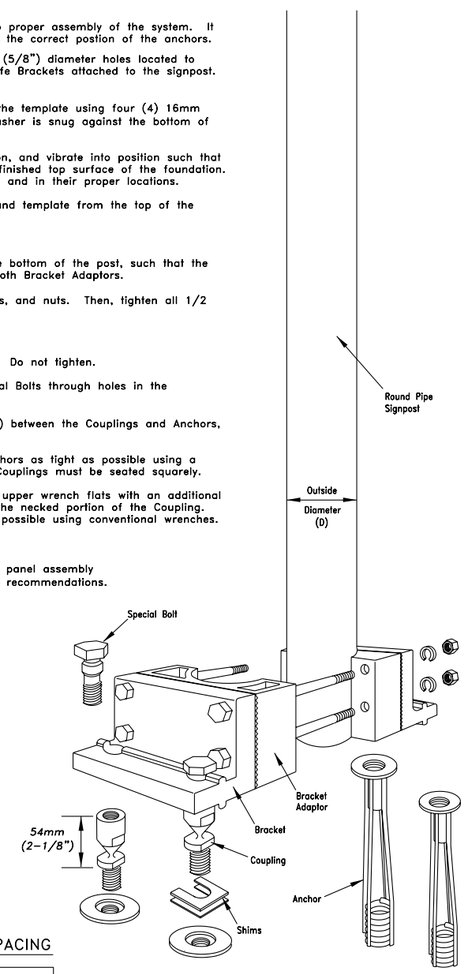

BREAK-SAFE MODEL AP ANCHOR SPACING

BREAK-SAFE MODEL	POST OUTSIDE DIAMETER (D)	NOMINAL PIPE SIZE	A	B
AP3	89 mm (3-1/2")	76 mm (3")	70 mm (2-3/4")	202 mm (7-15/16")
AP3.5	89 mm (3-1/2")	76 mm (3")	70 mm (2-3/4")	202 mm (7-15/16")
AP4	102 mm (4")	89 mm (3-1/2")	83 mm (3-1/4")	227 mm (8-15/16")
AP4.5	114 mm (4-1/2")	102 mm (4")	83 mm (3-1/4")	227 mm (8-15/16")

Patent Nos. 4,528,786 and 5,596,845

TRANSPO® INDUSTRIES, Inc. The Smart Solutions Company
20 Jones Street
New Rochelle, NY 10801
914-636-1000
www.transpo.com

Break-Safe Model AP
Breakaway Support System for Sign Posts

Scale: Not To Scale | Date: October 2004
Drawing No. BS-AP-2 | Sheet: 2 of 2

SPECIFICATIONS

Break-Away System Details
Transpo® AP4
Sign Type: RESIDENT.1

The FABRICATOR shall be familiar with all site conditions and shall be responsible for all underground utility checks.

The FABRICATOR shall be familiar with all basement/vault locations by obtaining plans from the local municipality Department of Public Works. Where a basement/vault interferes with a proposed location. The sign shall be relocated to a location deemed appropriate by the municipalities Department of Public Works.

Where relocation is not an option the FABRICATOR will develop the appropriate mounting solution. The solution shall meet all engineering criteria as established by the standard footings (i.e. windloads).

FINAL DESIGNS AND SHOP DRAWINGS SHALL BE SUPPLIED BY THE FABRICATOR FOR EACH OF THE BREAK-AWAY POLES IDENTIFIED AND A ARIZONA REGISTERED PROFESSIONAL ENGINEER IS REQUIRED TO SIGN AND SEAL THE SUBMITTAL OF SHOP DRAWINGS.

NOTE:

1) SOIL IS AVERAGE WITH MAXIMUM ALLOWABLE SOIL PRESSURE OF 3,000 POUNDS PER SQUARE FOOT. SOIL UNIT WEIGHT OF 125 PCF AND FRICTION ANGLE OF 30 DEGREES (ASSUMED).

2) CONCRETE STRENGTH AT 28 DAYS F'C=4,000 PSI, REINFORCEMENT SHALL BE ASTM 36 FY=60,000 PSI.

3) FOLLOW 2009 ADOT DESIGN STANDARDS FOR MATERIAL AND CONSTRUCTION INFORMATION FOR THE SIGN POST BASES AND FOUNDATIONS NOT OTHERWISE SPECIFIED IN THESE CONTRACT DRAWINGS.

4) FOR SIGN POST SIZES REFER TO THE DESIGN INTENT DRAWING SHEETS.

DESIGN NOTE:
Final design and shop drawings shall be supplied by the fabricator. An Arizona registered engineer is required to sign and seal the submittal of shop drawings.

NOTES

1. Fabricator shall verify the mounting conditions and provide a detail drawing for each mounting situation, prior to fabrication. Fabricator shall obtain approval from the Designer or Client for placement prior to fabrication.
2. Welds: All welds shall be ground smooth, paint all seams.
3. Hardware: All fasteners shall be concealed. If exposed, hardware shall be tamper proof fasteners, corrosion resistant, and color matching adjacent surfaces.
4. All painted sign surfaces to receive UV/Anti-Graffiti spray coating. All sign surfaces with reflective graphics to receive 3M approved UV/Anti-Graffiti overlaminate.

ENVIRONMENTS & EXPERIENCES
merje
120 North Church Street
Suite 208
West Chester, PA 19380
T 484.266.0648
www.merjedesign.com

CLIENT / PROJECT
Lake Havasu City, AZ Wayfinding Program

PROJECT NO.

SUBCONSULTANT

DATE January 8, 2015 | DRAWN BY: JC/PR

REVISIONS
February 10, 2015
August 2016

SHEET TITLE
Transpo® Break-Safe AP4 Breakaway System Details

SHEET NO.
E.17

These drawings are meant for DESIGN INTENT ONLY and are not for construction. Contractor shall verify and be responsible for all dimensions and conditions of the job. Contractor shall be familiar with the site and conditions it presents. This office must be notified of any variations from the dimensions and conditions shown on this drawing. Shop drawings and details must be submitted to this office for approval prior to proceeding with fabrication. All copy shall be proofread by client and legal requirements checked by legal department.

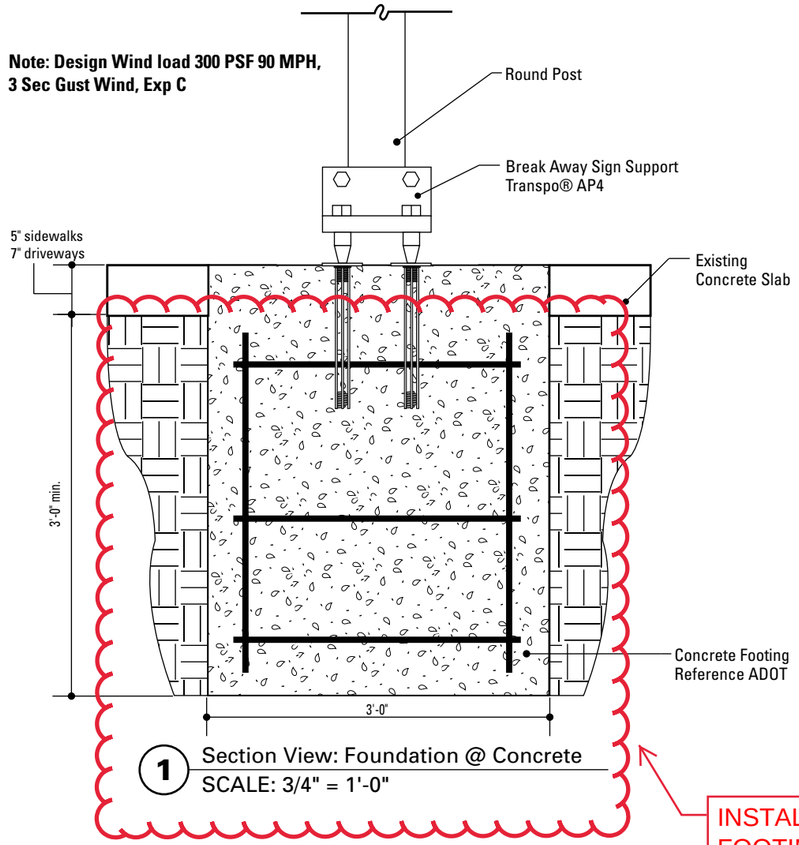

1 Section View: Foundation @ Concrete
SCALE: 3/4" = 1'-0"

INSTALLATION & FOOTING BY OTHERS (TYP.)

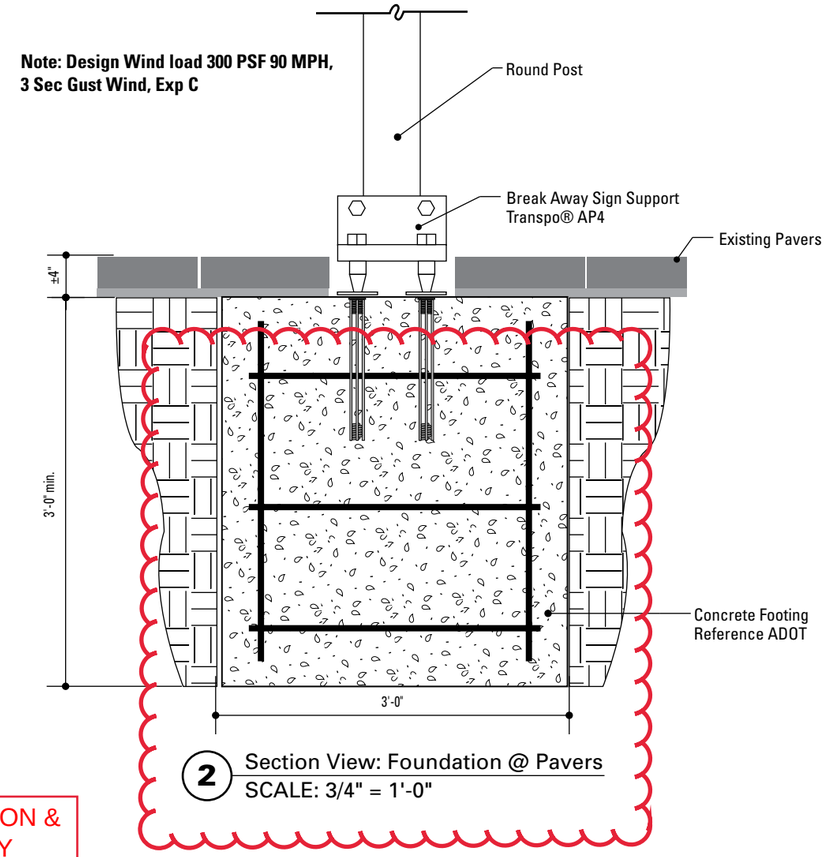

2 Section View: Foundation @ Pavers
SCALE: 3/4" = 1'-0"

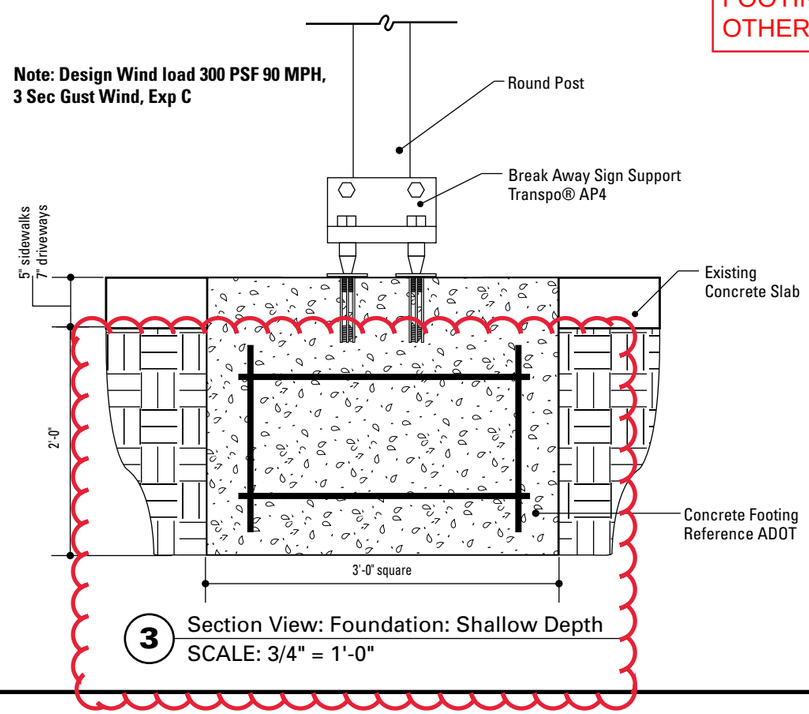

3 Section View: Foundation: Shallow Depth
SCALE: 3/4" = 1'-0"

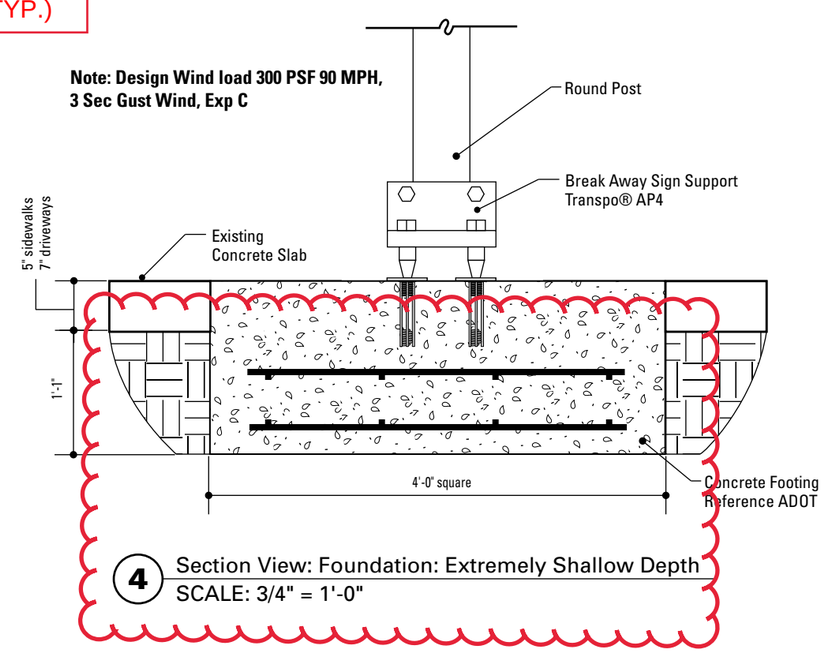

4 Section View: Foundation: Extremely Shallow Depth
SCALE: 3/4" = 1'-0"

SPECIFICATIONS

Footer Details
Transpo® AP4
Sign Type: RESIDENT.1

The FABRICATOR shall be familiar with all site conditions and shall be responsible for all underground utility checks.

The FABRICATOR shall be familiar with all basement/vault locations by obtaining plans from the local municipality Department of Public Works. Where a basement/vault interferes with a proposed location. The sign shall be relocated to a location deemed appropriate by the municipalities Department of Public Works.

Where relocation is not an option the FABRICATOR will develop the appropriate mounting solution. The solution shall meet all engineering criteria as established by the standard footings (i.e. windloads).

FINAL DESIGNS AND SHOP DRAWINGS SHALL BE SUPPLIED BY THE FABRICATOR FOR EACH OF THE BREAK-AWAY POLES IDENTIFIED AND A ARIZONA REGISTERED PROFESSIONAL ENGINEER IS REQUIRED TO SIGN AND SEAL THE SUBMITTAL OF SHOP DRAWINGS.

NOTE:

1) **SOIL IS AVERAGE WITH MAXIMUM ALLOWABLE SOIL PRESSURE OF 3,000 POUNDS PER SQUARE FOOT. SOIL UNIT WEIGHT OF 125 PCF AND FRICTION ANGLE OF 30 DEGREES (ASSUMED).**

2) **CONCRETE STRENGTH AT 28 DAYS F'C=4,000 PSI, REINFORCEMENT SHALL BE ASTM 36 FY=60,000 PSI.**

3) **FOLLOW 2009 ADOT DESIGN STANDARDS FOR MATERIAL AND CONSTRUCTION INFORMATION FOR THE SIGN POST BASES AND FOUNDATIONS NOT OTHERWISE SPECIFIED IN THESE CONTRACT DRAWINGS.**

4) **FOR SIGN POST SIZES REFER TO THE DESIGN INTENT DRAWING SHEETS.**

DESIGN NOTE:
Final design and shop drawings shall be supplied by the fabricator. An Arizona registered engineer is required to sign and seal the submittal of shop drawings.

NOTES

1. Fabricator shall verify the mounting conditions and provide a detail drawing for each mounting situation, prior to fabrication. Fabricator shall obtain approval from the Designer or Client for placement prior to fabrication.
2. Welds: All welds shall be ground smooth, paint all seams.
3. Hardware: All fasteners shall be concealed. If exposed, hardware shall be tamper proof fasteners, corrosion resistant, and color matching adjacent surfaces.
4. All painted sign surfaces to receive UV/Anti-Graffiti spray coating. All sign surfaces with reflective graphics to receive 3M approved UV/Anti-Graffiti overlaminate.

E N V I R O N M E N T S & E X P E R I E N C E S

merje

120 North Church Street
Suite 208
West Chester, PA 19380
T 484.266.0648
www.merjedesign.com

CLIENT / PROJECT

Lake Havasu City, AZ
Wayfinding Program

PROJECT NO.

SUBCONSULTANT

SHEET TITLE

Transpo®
Break-Safe AP4
Breakaway System Details

DATE	DRAWN BY:
January 8, 2015	JC/PR
REVISIONS	
February 10, 2015	
August 2016	

These drawings are meant for DESIGN INTENT ONLY and are not for construction. Contractor shall verify and be responsible for all dimensions and conditions of the job. Contractor shall be familiar with the site and conditions it presents. This office must be notified of any variations from the dimensions and conditions shown on this drawing. Shop drawings and details must be submitted to this office for approval prior to proceeding with fabrication. All copy shall be proofread by client and legal requirements checked by legal department.

SHEET NO.

E.18

PARTS LIST

ITEM	DESCRIPTION	SIZE/SPECIFICATIONS	QTY/ POST	PART NUMBER
1	Bracket, Type AS4	6061–T6 Aluminum	2	SBAK6117
2	Bracket Hardware Assembly, Type AS4, includes:		1	SB–AS4H
2a	Bolt	12.7mm(1/2")–13UNCx184mm(7–1/4"), Hex Head, ASTM A325, Galv. ASTM A153	4	
2b	LockWasher	12.7mm(1/2"), ANSI B18–21–1, Galv. ASTM A153	4	
2c	Nut	12.7mm(1/2")–13UNC, Heavy Hex, ASTM A563 Gr. DH, Galv. ASTM A153	4	
3	Coupling & Special Bolt Assembly, Type A, includes:		1	SB–CALP
3a	Special Bolt	15.9mm(5/8")–11UNC, ASTM A449, Galv. ASTM A153/B695	4	
3b	Coupling	15.9mm(5/8")–11UNC, LP, AMS 6378D, Galv. ASTM A153, Polyester Coat	4	
3c	Shim	15.9mm(5/8") Horseshoe, 14 Gauge, Galv. Steel Sheet	2	
3d	Shim	15.9mm(5/8") Horseshoe, 18 Gauge, Galv. Steel Sheet	2	
4	Anchor Assembly, Type A, includes:		1	SBAAPK
4a	Anchor	15.9mm(5/8")–11UNC, 304 S.S. Ferrule, AISI 1038 Rod, AISI 1008 Coil	4	

GENERAL NOTES:

1. Break–Safe meets all requirements of "AASHTO Standard Specifications for Structural Supports for Highway Signs, Luminaires and Traffic Signals."
2. Break–Safe Model AS4 is designed to fit 89 mm (3–1/2") and 102 mm (4") steel or aluminum square tube signposts.
3. All hardware items are American Standard sizes, gavanized in accordance with ASTM A153 (hot dipped) or ASTM B695 (mechanically applied).
4. Fasteners, except for special bolt and coupling, are installed with lockwashers, and do not have specific torque requirements. Fasteners should be secured as tight as possible with conventional wrenches, unless noted otherwise.
5. Square–up and level individual components, particularly Anchors to minimize the need for shimming between the Couplings and Anchors.
6. No more than two shims shall be placed under any one coupling. No more than three shims underneath any pair of couplings.
7. Refer to other side of page for complete installation instructions.

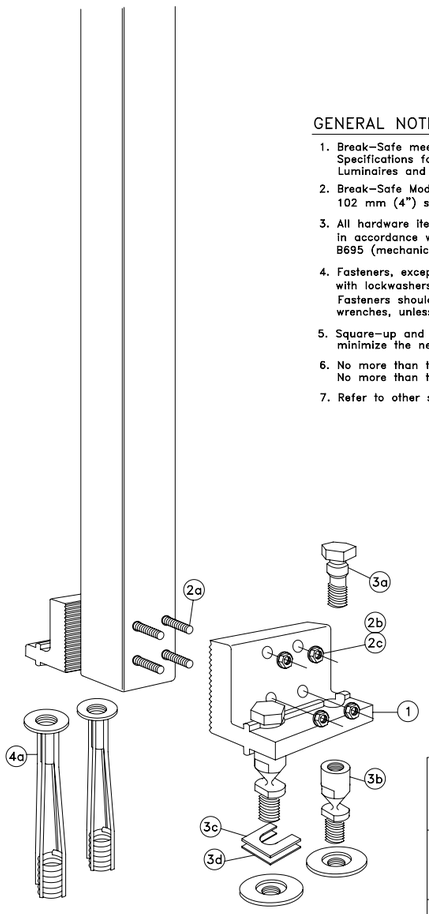

Patent Nos. 4,528,786 and 5,596,845

TRANSPO® INDUSTRIES, Inc. The Smart Solutions Company
20 Jones Street
New Rochelle, NY 10801
914–636–1000
www.transpo.com

Break–Safe Model AS4
Breakaway Support System for Sign Posts

Scale: Not To Scale | Date: December 2007
Drawing No. BS–AS4–1 | Sheet: 1 of 2

INSTALLATION INSTRUCTIONS

ANCHOR ASSEMBLY:

Note: Precise positioning of the anchors is critical to proper assembly of the system. It is recommended that actual posts be used to locate the correct postion of the anchors.

1. Fabricate a flat, rigid template with four (4) 16mm (5/8") diameter holes located to match the specified anchor pattern of the Break–Safe Brackets attached to the signpost. See diagram below.
2. Attach four (4) Transpo Type A Female Anchors to the template using four (4) 16mm (5/8") diameter bolts. Ensure that each Anchor Washer is snug against the bottom of the template.
3. Lower Anchor Assembly into fresh concrete foundation, and vibrate into position such that the tops of the Anchor Washers are flush with the finished top surface of the foundation. Support the template such that all Anchors are level and in their proper locations.
4. Allow concrete to cure, and then remove the bolts and template from the top of the foundation.

BRACKET ASSEMBLY:

1. Drill eight (8) 14.3mm (9/16") diameter holes in the bottom end of the post section as shown.
2. Place Brackets squarely on outer surface of the post, and secure with bolts, lock washers, and nuts. Then, tighten all 1/2 turn beyond snug.

COUPLING ASSEMBLY:

1. Thread four (4) Break–Safe Couplings into Anchors. Do not tighten.
2. Suspend post assembly over foundation, insert Special Bolts through holes in the Brackets, and thread them snug into the Couplings.
3. If post is not plumb, insert Shims (14g and/or 18g) between the Couplings and Anchors, where needed.
4. Use lower wrench flats to tighten Couplings into Anchors as tight as possible using a convensional wrench. Do not use a pipe wrench. Couplings must be seated squarely.
5. Tighten Special Bolts while holding Couplings by the upper wrench flats with an additional wrench to prevent an induced torque stress across the necked portion of the Coupling. All Special Bolts shall also be tightened as tight as possible using convensional wrenches.

SIGN PANEL ASSEMBLY:

1. After all signposts are secured in place, attach sign panel assembly to posts in accordance with the sign manufacturer's recommendations.

PLAN VIEW OF TYPICAL FOUNDATION

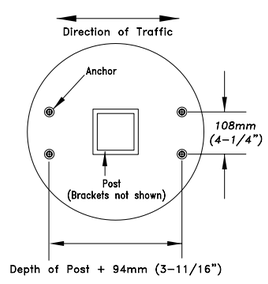

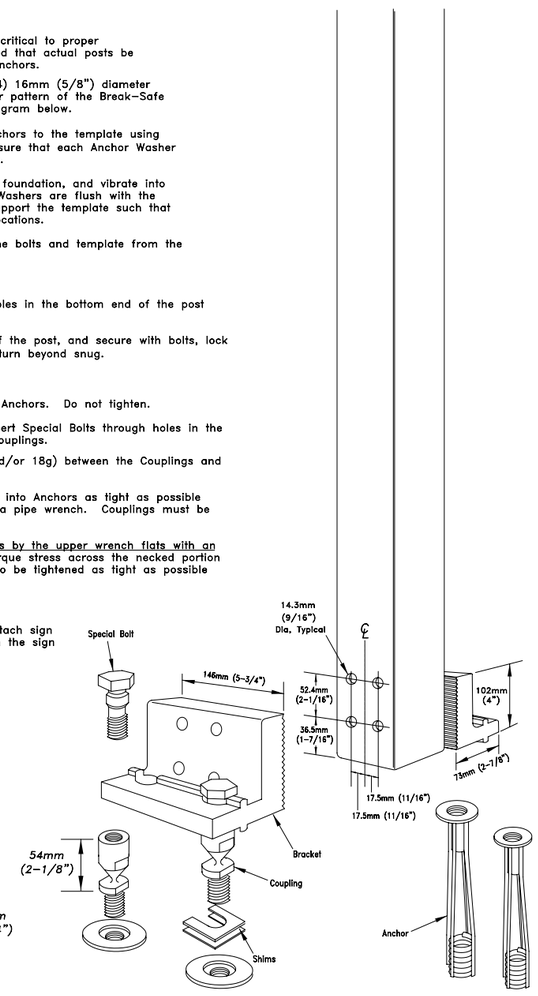

Patent Nos. 4,528,786 and 5,596,845

TRANSPO® INDUSTRIES, Inc. The Smart Solutions Company
20 Jones Street
New Rochelle, NY 10801
914–636–1000
www.transpo.com

Break–Safe Model AS4
Breakaway Support System for Sign Posts

Scale: Not To Scale | Date: December 2007
Drawing No. BS–AS4–2 | Sheet: 2 of 2

SPECIFICATIONS

Break-Away System Details
Transpo® AS4
Sign Type: RESIDENT.1

The FABRICATOR shall be familiar with all site conditions and shall be responsible for all underground utility checks.

The FABRICATOR shall be familiar with all basement/vault locations by obtaining plans from the local municipality Department of Public Works. Where a basement/vault interferes with a proposed location. The sign shall be relocated to a location deemed appropriate by the municipalities Department of Public Works.

Where relocation is not an option the FABRICATOR will develop the appropriate mounting solution. The solution shall meet all engineering criteria as established by the standard footings (i.e. windloads).

FINAL DESIGNS AND SHOP DRAWINGS SHALL BE SUPPLIED BY THE FABRICATOR FOR EACH OF THE BREAK-AWAY POLES IDENTIFIED AND A ARIZONA REGISTERED PROFESSIONAL ENGINEER IS REQUIRED TO SIGN AND SEAL THE SUBMITTAL OF SHOP DRAWINGS.

NOTE:

1) SOIL IS AVERAGE WITH MAXIMUM ALLOWABLE SOIL PRESSURE OF 3,000 POUNDS PER SQUARE FOOT. SOIL UNIT WEIGHT OF 125 PCF AND FRICTION ANGLE OF 30 DEGREES (ASSUMED).

2) CONCRETE STRENGTH AT 28 DAYS F'C=4,000 PSI, REINFORCEMENT SHALL BE ASTM 36 FY=60,000 PSI.

3) FOLLOW 2009 ADOT DESIGN STANDARDS FOR MATERIAL AND CONSTRUCTION INFORMATION FOR THE SIGN POST BASES AND FOUNDATIONS NOT OTHERWISE SPECIFIED IN THESE CONTRACT DRAWINGS.

4) FOR SIGN POST SIZES REFER TO THE DESIGN INTENT DRAWING SHEETS.

DESIGN NOTE:
Final design and shop drawings shall be supplied by the fabricator. An Arizona registered engineer is required to sign and seal the submittal of shop drawings.

NOTES

1. Fabricator shall verify the mounting conditions and provide a detail drawing for each mounting situation, prior to fabrication. Fabricator shall obtain approval from the Designer or Client for placement prior to fabrication.
2. Welds: All welds shall be ground smooth, paint all seams.
3. Hardware: All fasteners shall be concealed. If exposed, hardware shall be tamper proof fasteners, corrosion resistant, and color matching adjacent surfaces.
4. All painted sign surfaces to receive UV/Anti-Graffiti spray coating. All sign surfaces with reflective graphics to receive 3M approved UV/Anti-Graffiti overlaminate.

ENVIRONMENTS & EXPERIENCES
merje
120 North Church Street
Suite 208
West Chester, PA 19380
T 484.266.0648
www.merjedesign.com

CLIENT / PROJECT
Lake Havasu City, AZ Wayfinding Program

PROJECT NO.

SUBCONSULTANT

DATE January 8, 2015 | DRAWN BY: JC/PR

REVISIONS
February 10, 2015
August 2016

SHEET TITLE
Transpo® Break-Safe AS4 Breakaway System Details

SHEET NO.
E.19

These drawings are meant for DESIGN INTENT ONLY and are not for construction. Contractor shall verify and be responsible for all dimensions and conditions of the job. Contractor shall be familiar with the site and conditions it presents. This office must be notified of any variations from the dimensions and conditions shown on this drawing. Shop drawings and details must be submitted to this office for approval prior to proceeding with fabrication. All copy shall be proofread by client and legal requirements checked by legal department.

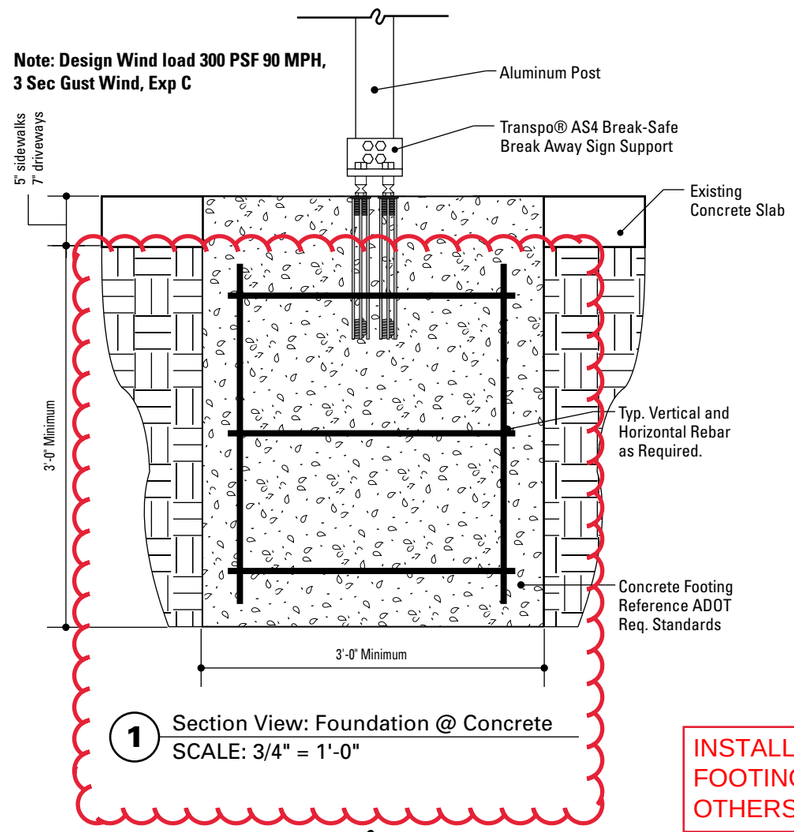

1 Section View: Foundation @ Concrete
SCALE: 3/4" = 1'-0"

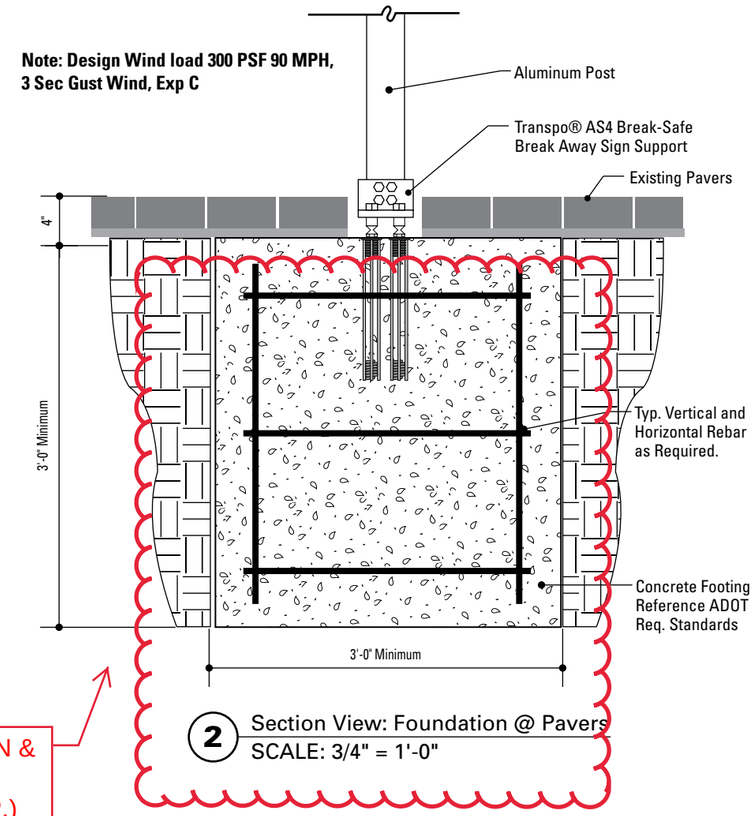

2 Section View: Foundation @ Pavers
SCALE: 3/4" = 1'-0"

INSTALLATION & FOOTING BY OTHERS (TYP.)

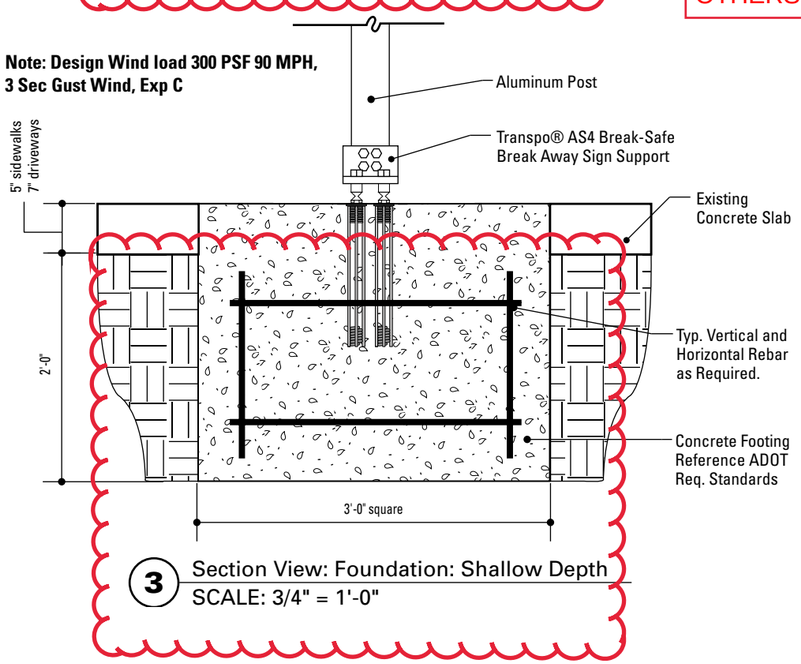

3 Section View: Foundation: Shallow Depth
SCALE: 3/4" = 1'-0"

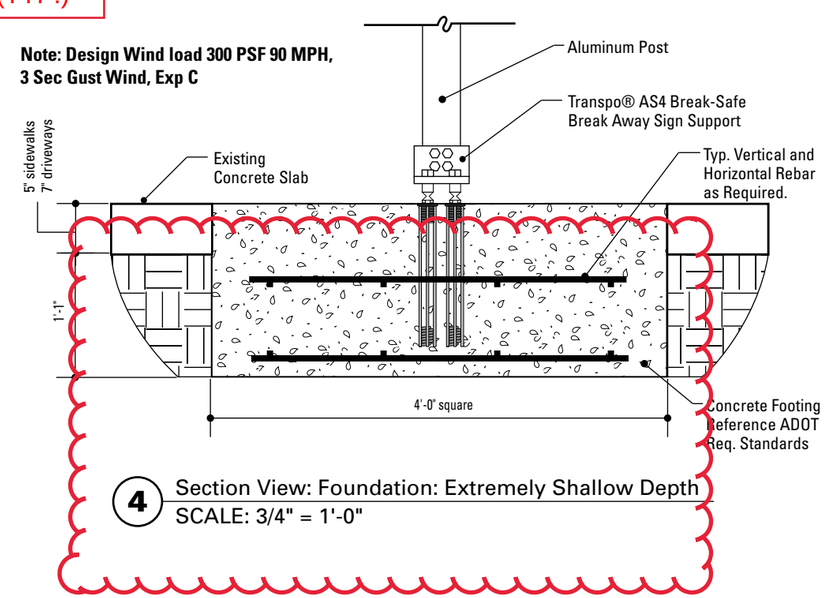

4 Section View: Foundation: Extremely Shallow Depth
SCALE: 3/4" = 1'-0"

SPECIFICATIONS

Footer Details
Transpo® AS4
Sign Type: RESIDENT.1

The FABRICATOR shall be familiar with all site conditions and shall be responsible for all underground utility checks.

The FABRICATOR shall be familiar with all basement/vault locations by obtaining plans from the local municipality Department of Public Works. Where a basement/vault interferes with a proposed location. The sign shall be relocated to a location deemed appropriate by the municipalities Department of Public Works.

Where relocation is not an option the FABRICATOR will develop the appropriate mounting solution. The solution shall meet all engineering criteria as established by the standard footings (i.e. windloads).

FINAL DESIGNS AND SHOP DRAWINGS SHALL BE SUPPLIED BY THE FABRICATOR FOR EACH OF THE BREAK-AWAY POLES IDENTIFIED AND A ARIZONA REGISTERED PROFESSIONAL ENGINEER IS REQUIRED TO SIGN AND SEAL THE SUBMITTAL OF SHOP DRAWINGS.

NOTE:

1) SOIL IS AVERAGE WITH MAXIMUM ALLOWABLE SOIL PRESSURE OF 3,000 POUNDS PER SQUARE FOOT. SOIL UNIT WEIGHT OF 125 PCF AND FRICTION ANGLE OF 30 DEGREES (ASSUMED).

2) CONCRETE STRENGTH AT 28 DAYS F'C=4,000 PSI, REINFORCEMENT SHALL BE ASTM 36 FY=60,000 PSI.

3) FOLLOW 2009 ADOT DESIGN STANDARDS FOR MATERIAL AND CONSTRUCTION INFORMATION FOR THE SIGN POST BASES AND FOUNDATIONS NOT OTHERWISE SPECIFIED IN THESE CONTRACT DRAWINGS.

4) FOR SIGN POST SIZES REFER TO THE DESIGN INTENT DRAWING SHEETS.

DESIGN NOTE:
Final design and shop drawings shall be supplied by the fabricator. An Arizona registered engineer is required to sign and seal the submittal of shop drawings.

NOTES

1. Fabricator shall verify the mounting conditions and provide a detail drawing for each mounting situation, prior to fabrication. Fabricator shall obtain approval from the Designer or Client for placement prior to fabrication.
2. Welds: All welds shall be ground smooth, paint all seams.
3. Hardware: All fasteners shall be concealed. If exposed, hardware shall be tamper proof fasteners, corrosion resistant, and color matching adjacent surfaces.
4. All painted sign surfaces to receive UV/Anti-Graffiti spray coating. All sign surfaces with reflective graphics to receive 3M approved UV/Anti-Graffiti overlaminate.

ENVIRONMENTS & EXPERIENCES
merje
120 North Church Street
Suite 208
West Chester, PA 19380
T 484.266.0648
www.merjedesign.com

CLIENT / PROJECT
Lake Havasu City, AZ Wayfinding Program

PROJECT NO.

SUBCONSULTANT

DATE January 8, 2015

DRAWN BY: JC/PR

REVISIONS
February 10, 2015
August 2016

SHEET TITLE
Transpo® Break-Safe AS4 Breakaway System Details

SHEET NO.
E.20

These drawings are meant for DESIGN INTENT ONLY and are not for construction. Contractor shall verify and be responsible for all dimensions and conditions of the job. Contractor shall be familiar with the site and conditions it presents. This office must be notified of any variations from the dimensions and conditions shown on this drawing. Shop drawings and details must be submitted to this office for approval prior to proceeding with fabrication. All copy shall be proofread by client and legal requirements checked by legal department.

ULTRA-LOK® Band

Apply four times faster than band and buckle with hand tools!

(back to index)

ULTRA-LOK® Band in Tote

ULTRA-LOK® Band with ULTRA-LOK® Buckles

- Form band lock under full tension, meaning less slippage.
- Correct assembly guided by matching arrow indicators on band and buckle.
- Offers good resistance to oxidation and many moderate corrosive agents.
- 201 1/4 hard SS band provides greater material strength allowing tighter clamps and can be double wrapped for additional strength.
- 3/4" band available in plastic tote with buckle storage area, 1/2" band available in cardboard boxes.
- Buckles sold separately.

ULTRA-LOK® Free-End Band

Part No.	Material	Band Width		Maximum Clamping Diameter				Band Length		Package Quantity	Package Weight	
				Single Wrap		Double Wrap						
		In.	(mm)	In.	(mm)	In.	(mm)	In.	(mm)		Lbs.	Kg
UL1018**	201SS 1/4 Hard	1/2	12.7	3	76	1.5	38	18	457	50/Box	4.1	1.9
UL1024**	201SS 1/4 Hard	1/2	12.7	5	127	2.5	64	24	610	50/Box	5.3	2.4
UL1028**	201SS 1/4 Hard	1/2	12.7	6	152	3	76	28	711	50/Box	6.4	2.9
UL1032**	201SS 1/4 Hard	1/2	12.7	7	178	3.5	89	32	813	50/Box	7.2	3.3
UL1036**	201SS 1/4 Hard	1/2	12.7	8	203	4	102	36	914	50/Box	8.0	3.6
UL1046**	201SS 1/4 Hard	1/2	12.7	11	279	5.5	140	46	1168	25/Box	5.9	2.7
UL1056**	201SS 1/4 Hard	1/2	12.7	14	356	7	178	56	1422	25/Box	7.1	3.2
UL1070**	201SS 1/4 Hard	1/2	12.7	18	457	9	229	70	1778	25/Box	8.5	3.9
UL1086**	201SS 1/4 Hard	1/2	12.7	22	559	11	280	86	2184	25/Box	10.2	4.6
UL1096**	201SS 1/4 Hard	1/2	12.7	25	635	12.5	318	96	2438	25/Box	11.2	5.1
UL1106**	201SS 1/4 Hard	1/2	12.7	28	711	14	356	106	2692	25/Box	12.3	5.6
UL1116**	201SS 1/4 Hard	1/2	12.7	31	787	15.5	394	116	2946	25/Box	13.3	6.0
UL2020	201SS 1/4 Hard	3/4	19.1	4	102	Not Suggested		20	508	30/Tote	4.3	2.0
UL2024	201SS 1/4 Hard	3/4	19.1	5	140	Not Suggested		24	610	25/Tote	4.1	1.9
UL2028	201SS 1/4 Hard	3/4	19.1	6	152	Not Suggested		28	711	21/Tote	4.3	2.0
UL2032	201SS 1/4 Hard	3/4	19.1	7	178	3.5	89	32	813	18/Tote	4.3	2.0
UL2036	201SS 1/4 Hard	3/4	19.1	8	252	4	102	36	914	33/Tote	8.2	3.7
UL2040	201SS 1/4 Hard	3/4	19.1	10	254	4.5	127	40	1016	30/Tote	7.75	3.5
UL2044	201SS 1/4 Hard	3/4	19.1	11	267	5.5	140	44	1118	27/Tote	8.2	3.7
UL2048	201SS 1/4 Hard	3/4	19.1	12	305	6	153	48	1219	25/Tote	8.2	3.7
UL2052	201SS 1/4 Hard	3/4	19.1	13	330	6.5	165	52	1321	23/Tote	8.2	3.7
UL2060	201SS 1/4 Hard	3/4	19.1	15	381	7.5	191	60	1524	20/Tote	8.2	3.7
UL2068	201SS 1/4 Hard	3/4	19.1	17	445	8.5	216	68	1727	17/Tote	8.2	3.7
UL2076	201SS 1/4 Hard	3/4	19.1	20	508	10	254	76	1930	15/Tote	8.2	3.7
UL2084	201SS 1/4 Hard	3/4	19.1	22	559	11	280	84	2134	14/Tote	8.2	3.7
UL2092	201SS 1/4 Hard	3/4	19.1	24	622	12	305	92	2337	13/Tote	8.2	3.7
UL2120	201SS 1/4 Hard	3/4	19.1	32	826	16	407	120	3048	10/Tote	8.2	3.7
UL2150	201SS 1/4 Hard	3/4	19.1	41	1029	20.5	508	150	3810	8/Tote	8.2	3.7
UL2175	201SS 1/4 Hard	3/4	19.1	48	1232	24	610	175	4445	7/Tote	8.2	3.7

***1/2" Bands will require M09387 for UL4000B and UL9010 tool.*

3/4" width band lengths 36" or longer in 100' totes; 34" or less in 50' totes

ULTRA-LOK® is also available in preformed clamps.

ULTRA-LOK® Buckles

Part No.	Material	Description	Package Quantity	Package Weight	
				Lbs.	Kg
UB2549	201 SS	1/2" ULTRA-LOK® Buckles	100/Box	3.7	1.7
UB2569	201 SS	3/4" ULTRA-LOK® Buckles	100/Box	3.7	1.7

ULTRA-LOK® Accessories

Part No.	Description	Package Quantity	Package Weight	
			Lbs.	Kg
ULK249	Kit; Used to upgrade the tension body of the UL9000 and UL9010.	Each	0.4	0.2
M09387	1/2" Shear plate for UL4000-C, upgraded UL9000 and UL9010 to convert from 3/4" ULTRA-LOK® to 1/2" ULTRA-LOK® Clamp Systems.	Each	0.1	0.1

Information

Does BAND-IT® offer any colored band to match the color of a decorative pole?

Application Tools

ULTRA-LOK® UL 4000-C Tool

ULTRA-LOK® UL 9010 Tool

SPECIFICATIONS

Band-It® SS Strapping Details
Sign Type:
PARK.1A

DESIGN NOTE:
Final design and shop drawings shall be supplied by the fabricator. An Arizona registered engineer is required to sign and seal the submittal of shop drawings.

NOTES

1. Fabricator shall verify the mounting conditions and provide a detail drawing for each mounting situation, prior to fabrication. Fabricator shall obtain approval from the Designer or Client for placement prior to fabrication.
2. Welds: All welds shall be ground smooth, paint all seams.
3. Hardware: All fasteners shall be concealed. If exposed, hardware shall be tamper proof fasteners, corrosion resistant, and color matching adjacent surfaces.
4. All painted sign surfaces to receive UV/Anti-Graffiti spray coating. All sign surfaces with reflective graphics to receive 3M approved UV/Anti-Graffiti overlaminate.

E N V I R O N M E N T S & E X P E R I E N C E S

merje

120 North Church Street
Suite 208
West Chester, PA 19380
T 484.266.0648
www.merjedesign.com

CLIENT / PROJECT

Lake Havasu City, AZ Wayfinding Program

PROJECT NO.

SUBCONSULTANT

SHEET TITLE

Band-It® SS Strapping Details

DATE January 8, 2015

DRAWN BY: JC/PR

REVISIONS

February 10, 2015

August 2016

These drawings are meant for DESIGN INTENT ONLY and are not for construction. Contractor shall verify and be responsible for all dimensions and conditions of the job. Contractor shall be familiar with the site and conditions it presents. This office must be notified of any variations from the dimensions and conditions shown on this drawing. Shop drawings and details must be submitted to this office for approval prior to proceeding with fabrication. All copy shall be proofread by client and legal requirements checked by legal department.

SHEET NO.

E.21

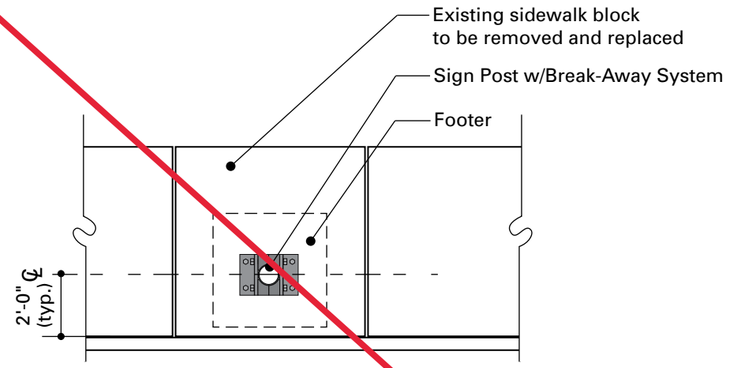

NOTE: When locating a footer within a single pavement block adjacent to at least 2 expansion joints, the entire block of pavement shall be removed and replaced with the same materials and finish of adjacent sidewalk areas.

1 Plan: Footer Placement
SCALE: NTS

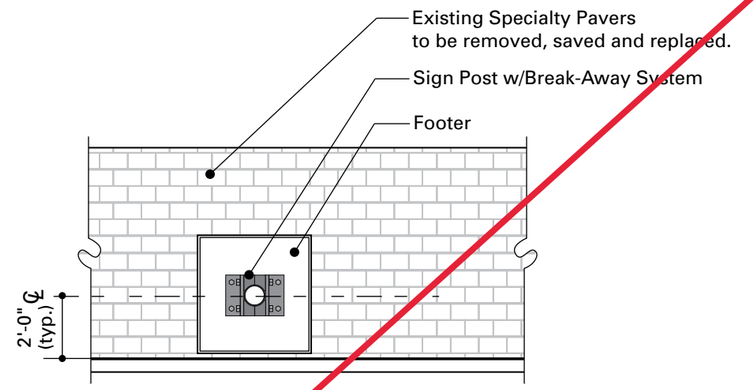

NOTE: The pattern of bricks need to be removed, stored and replaced in the order they were removed. Marking the Specialty Pavers sidewalk with spray paint will NOT be allowed.

3 Plan: Specialty Pavers Footer Placement
SCALE: NTS

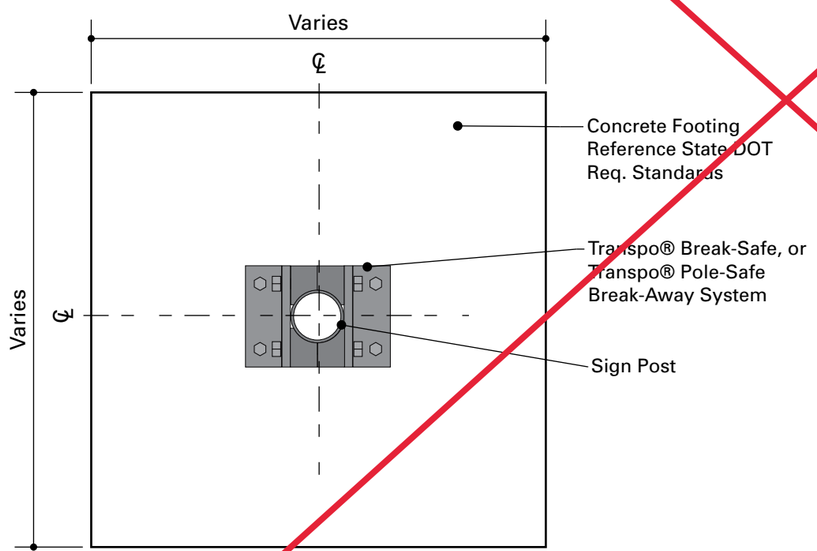

2 Plan View: Footer
SCALE: 1" = 1' - 0"

ACCEPTABLE Finish Detail

ACCEPTABLE Finish Detail

ACCEPTABLE Finish Detail

UNACCEPTABLE Finish Detail

UNACCEPTABLE Finish Detail

UNACCEPTABLE Finish Detail

THIS PAGE NOT PART OF CONTRACT. INSTALLATION BY OTHERS

SPECIFICATIONS

Sidewalk Footer Placement Details

The FABRICATOR shall be familiar with all site conditions and shall be responsible for all underground utility checks.

The FABRICATOR shall be familiar with all basement/vault locations by obtaining plans from the local municipality Department of Public Works. Where a basement/vault interferes with a proposed location. The sign shall be relocated to a location deemed appropriate by the municipalities Department of Public Works.

Where relocation is not an option the FABRICATOR will develop the appropriate mounting solution. The solution shall meet all engineering criteria as established by the standard footings (i.e. windloads).

FINAL DESIGNS AND SHOP DRAWINGS SHALL BE SUPPLIED BY THE FABRICATOR FOR EACH OF THE BREAK-AWAY POLES IDENTIFIED AND A ARIZONA REGISTERED PROFESSIONAL ENGINEER IS REQUIRED TO SIGN AND SEAL THE SUBMITTAL OF SHOP DRAWINGS.

NOTE:

1) SOIL IS AVERAGE WITH MAXIMUM ALLOWABLE SOIL PRESSURE OF 3,000 POUNDS PER SQUARE FOOT. SOIL UNIT WEIGHT OF 125 PCF AND FRICTION ANGLE OF 30 DEGREES (ASSUMED).

2) CONCRETE STRENGTH AT 28 DAYS F'C=4,000 PSI, REINFORCEMENT SHALL BE ASTM 36 FY=60,000 PSI.

3) FOLLOW 2009 ADOT DESIGN STANDARDS FOR MATERIAL AND CONSTRUCTION INFORMATION FOR THE SIGN POST BASES AND FOUNDATIONS NOT OTHERWISE SPECIFIED IN THESE CONTRACT DRAWINGS.

4) FOR SIGN POST SIZES REFER TO THE DESIGN INTENT DRAWING SHEETS.

DESIGN NOTE:
Final design and shop drawings shall be supplied by the fabricator. An Arizona registered engineer is required to sign and seal the submittal of shop drawings.

NOTES

1. Fabricator shall verify the mounting conditions and provide a detail drawing for each mounting situation, prior to fabrication. Fabricator shall obtain approval from the Designer or Client for placement prior to fabrication.
2. Welds: All welds shall be ground smooth, paint all seams.
3. Hardware: All fasteners shall be concealed. If exposed, hardware shall be tamper proof fasteners, corrosion resistant, and color matching adjacent surfaces.
4. All painted sign surfaces to receive UV/Anti-Graffiti spray coating. All sign surfaces with reflective graphics to receive 3M approved UV/Anti-Graffiti overlaminate.

ENVIRONMENTS & EXPERIENCES
merje
120 North Church Street
Suite 208
West Chester, PA 19380
T 484.266.0648
www.merjedesign.com

CLIENT / PROJECT
Lake Havasu City, AZ Wayfinding Program

PROJECT NO.

SUBCONSULTANT

DATE January 8, 2015

DRAWN BY: JC/PR

REVISIONS
February 10, 2015
August 2016

SHEET TITLE
Sidewalk Footer Placement Details

SHEET NO.
E.22

These drawings are meant for DESIGN INTENT ONLY and are not for construction. Contractor shall verify and be responsible for all dimensions and conditions of the job. Contractor shall be familiar with the site and conditions it presents. This office must be notified of any variations from the dimensions and conditions shown on this drawing. Shop drawings and details must be submitted to this office for approval prior to proceeding with fabrication. All copy shall be proofread by client and legal requirements checked by legal department.

PART 1 – GENERAL

1.01 WORK RELATED

A Labor, materials, equipment and services necessary for the fabrication, delivery and installation of signage as described in the detail design intent drawings.

B Refer to the message schedule for a complete list of sign types and quantities.

Signs listed on message schedule should match those indicated on sign location plans. Contractor to notify owner of any discrepancies in sign quantities by doing take-offs before manufacturing signs.

C Signage is located in Lake Havasu City, Arizona.

D For all signs, all fasteners, support structures required for installation.

1.02 RELATED WORK

A General carpentry and painting requirements: all work to be done in a professional manner and to the highest trade standards.

B Use OSHA safety requirements if necessary for pedestrian and/or vehicular safety.

1.03 REGULATORY REQUIREMENTS

Observe applicable codes, sign ordinances and ADA guidelines for handicapped and fire/life safety signing. All exterior signs located in the public right-of-way, including local city, county and state roadways, shall comply with the 2009 MUTCD standards.

1.04 REFERENCE STANDARDS

Refer to current editions of the following:

A MUTCD standards manual, 2009 edition.

B Federal ADAAG, 2010 standards.

C ASTM B 209–Aluminum sheet and plate.

D ASTM B 221–Aluminum-alloy extruded bars, rods, wire, shapes and tubes.

E ASTM D 822–Light and water exposure apparatus (carbon-arc type) for testing paint, varnish, lacquer and related products.

F ASTM E 84–Surface burning characteristics of building materials.

G ASTM C 143-74–Concrete slump test.

1.05 SUBMITTALS

A Bid submittal requirements

1 All of the inclusive bid submittals must be provided to be considered a qualified bid.

2 All proprietary contractual paperwork provided by the client filled out accurately, including all requested bonding and insurance information.

3 Submit completed spreadsheet (form and/or file provided) with all requested line item prices. Ensure that all row and column totals add up properly. Use the provided format, do NOT use a different spreadsheet format.

4 Submit a projected project schedule. Schedule will show major milestones such as sample submittals, fabrication, and installation. The payment schedule will be tied to reaching these milestones. Schedule will be updated regularly throughout the project.

B Requirements

1 Schedule shop drawings, product data and sample submittals for delivery at the same time.

2 The owner may hold shop drawings, product data and samples in cases where a partial submittal cannot be reviewed until associated items have been received.

3 Allocate not less than four weeks, plus mailing time, for processing by the owner.

C Schedule

1 Submit Gantt-style schedule with all pertinent dates and milestones for the project.

2 Include all lead times for materials, processes and thrid party products or components.

3 Include submittal delivery dates, fabrication and installation dates.

4 Allow several weeks in schedule for review and revision time for all submittals.

5 Revise schedule regularly as project details dictate.

6 Contractor shall pay $1,000 a day for each day past the agreed upon project deadline, unless otherwise stated in the owner-contractor agreement.

D Shop Drawings

NOTE: All final shop drawings must have an engineering stamp from a state licensed engineer before being approved for fabrication.

1 Submit three (3) sets of shop drawings as outlined below.

2 Include plans, elevations, sections and large scale details of sign wording and lettering layout. Show anchorages and accessory items. Provide mounting templates.

3 Show fabrication and installation details, including all sign components such as extrusions, brackets, bracing, hardware, internal framing, foundations, etc.

4 Provide engineering data to confirm viability of signs and supports, including structural stability of all signs, fasteners and foundation design.

5 Structural details must be reviewed and stamped by a state certified structural engineer, ensuring structural integrity and safety.

E Sub Contractor Qualifications Information

1 The total percentage of subcontracted work on this project is not to exceed 49% including installation.

2 Fabricator must submit credentials for any subcontractor selected to execute any portion of this contract. This must be submitted with proposal or bid. Demonstrate subs qualifications for doing specified work.

F Samples

1 Submit three (3) sets of each sample required.

2 Owner reserves the right to reject any samples that do not satisfy the construction, finish or color requirements. Submit additional samples as required to obtain final approval.

3 Samples shall be labeled on the back, designating item number, name of manufacturer, name of project.

4 The following sample submittals are required for this project:

The following samples MUST be submitted and approved PRIOR to the fabrication of the signs.

a) 3 sets of all color samples, including paint and vinyl samples on thin aluminum plates (approx. 3" x 6").

b) 2 sets of material samples.

c) Sample fasteners, hardware and mounting hardware sufficient to obtain clear ideas of how signs are fabricated, made changeable and installed.

d) One (1) full size VDIR.1 sign panel, with reflective vinyl, pre-drilled holes, support arms, and hardware. NOT to be job used.

e) One (1) full size VDIR clamshell collar, painted, with hardware. Does not need to have sign pole. NOT to be job used.

e) One (1) full size PARK.1A sign panel, with bracket and hardware. NOT to be job used.

5 Samples should represent extreme variations in color and texture that might occur during fabrication.

G Maintenance Data

1 Submit two (2) copies of each manufacturer's recommendations for maintenance of all items.

2 The instructions shall cover cleaning, repair, repainting and maintenance of signs, including data on cleaning solutions or methods of application which should be avoided.

1.06 DELIVERY OF ATTIC STOCK (IF ANY)

A For any attic stock ordered, package separately or in like groups labeled as to contents. Include installation hardware, adhesives and installation instructions; include a reasonable array of alternative adhesives, fasteners or materials to be able to respond effectively to varying field conditions.

1.07 PROTECTION

A Store and protect assemblies from injury at the shop, in transit to the job and until erected in place, completed, inspected and accepted.

NOTES:

ENVIRONMENTS & EXPERIENCES
merje
120 North Church Street
Suite 208
West Chester, PA 19380
T 484.266.0648
www.merjedesign.com

DATE January 8, 2015

DRAWN BY: JC/PR

These drawings are meant for DESIGN INTENT ONLY and are not for construction. Contractor shall verify and be responsible for all dimensions and conditions of the job. Contractor shall be familiar with the site and conditions it presents. This office must be notified of any variations from the dimensions and conditions shown on this drawing. Shop drawings and details must be submitted to this office for approval prior to proceeding with fabrication. All copy shall be proofread by client and legal requirements checked by legal department.

REVISIONS

February 10, 2015

August 2016

CLIENT / PROJECT

Lake Havasu City Wayfinding Program

PROJECT NO.

SHEET TITLE

Performance Specifications

SHEET NO.

F.1

PART 1 – GENERAL *continued*

B Take special precautions to prevent pilferage both prior to and after installation. Be prepared to provide replacements for any material so removed from the site.

1.08 INSPECTION

A Materials, colors and fabricated or partially fabricated items shall be available for inspection at the factory or elsewhere, by the owner or designer during the process of manufacture and until final delivery, installation and acceptance, to determine whether or not there is compliance with the requirements of these specifications.

B Approval prior to the time of final acceptance shall not preclude rejection of delivered items which do not satisfy these specifications.

1.09 REORDERING

All items specified herein shall be available to the owner in additional quantities for a period of 10 years after completion of all work called for in this specification.

1.10 WARRANTY

All warranties on fabricator's standard contract forms must be modified to match warranty criteria mentioned herewith. Any changes in warranty length or criteria must be negotiated prior to contract signing. Any discrepancies from fabricator's contract are superseded by this performance specification.

ALL PAINT FINISH WARRANTIES MUST BE ACCOMPANIED BY SIGNED WARRANTY AGREEMENTS WITH THE PAINT MANUFACTURER AND FINISHER.

A Warrant all products (including, but not limited to, materials, hardware and finishes) against any and all defects for **a minimum period of five (5) years** from date of installation.

B Correct any and all defects in material and/or workmanship which may appear during the warranty period by restoring defective work to the standard of the contract documents at no cost to the owner and to the owner's satisfaction.

C Custom color background and characters printed with 3M inks direct to 3M High Intensity Prismatic Reflective Sheeting Series 3930, with 3M ElectroCut Film 1170 overlaminate (applied according to 3M specifications to aluminum sheet), must be warranted for a period of eight (8) years and shall not excessively fade, discolor, crack, craze, peel, blister or lose reflectivity such that the signs become visually unsuitable for their intended purpose.

D Vinyl die-cut letters shall be warranted for five (5) years against delamination from substrate.

E Correct any and all paint finish defects which may appear during the warranty period by restoring defective work to the standard of the contract documents at no cost to the owner and to the owner's satisfaction.

F Additional corrections shall include, but not be limited to, the following:

1 Peeling, bubbling, crazing, chalking, rusting or other disintegration of the sign face or of the messages or of the edge finish of the sign inserts or panel.

2 Corrosion developing beneath paint surfaces of the support systems (except when it is the result of obvious vandalism or other external damage to the paint surfaces).

3 Corrosion of the fastenings.

4 The signs not remaining true or plumb on their supports.

5 Fading of the colors when matched against a sample of the original color and material.

6 Discoloration of metal finishes.

1.11 ALTERNATE FABRICATION

A The drawings show design intent only. The fabricator is responsible for fabrication and overall level of quality. Any changes in design, materials, fabrication techniques or details necessary to the successful completion of this project should be communicated to the designer and the owner in a timely fashion.

Further development and engineering of designer's details (for fabrication and installation) is expected and should be shown in the shop drawings.

B The designer recognizes that manufacturers may have shop fabrication techniques that differ from details shown. Suggested changes in fabrication that do not alter the design intent nor reduce the quality will be considered by the designer provided they are submitted in sketch from as soon as possible prior to shop drawing preparation.

C Any value engineering changes during fabrication shall be split evenly between the contractor and owner.

Signing Notes:

General

1. All signs shall be in compliance with the Manual on Uniform Traffic Control Devices (MUTCD Signing and Marking Standard Drawings, and the ADOT Traffic Engineering Manual of Approved Signs.

Location

2. The sign locations and the post lengths are approximate. The Contractor shall verify the sign locations and actual post lengths with the Engineer prior to installing signs.
3. The bottom of each sign shall be at least 7 feet above the nearest edge of pavement and at least 7 feet above the ground under the sign.
4. Offsets for all signs shall be measured from the edge of the roadway to the nearest edge of the sign.

Panel

5. All new signs shall be fabricated of flat sheet aluminum as indicated in Section 608. ADOT Sign Panel.

Sheeting

6. The retroreflective sheeting on all new signs shall meet ADOT Standard Specifications.
7. The retroreflective sheeting on all new signs shall meet criteria established in Section 1007 of the Standard Specifications and in Section 380 of ADOT's Traffic Policies, Guidelines and Procedures.

Posts

8. All new signs shall be installed on new square tube posts with foundation as indicated in ADOT Standard Drawings.
9. The Engineer may modify the signing plans.

Shop Drawings

10. Shop drawings will be required.
11. Shop drawings will not be required for all signs.

Removals

12. The contractor shall remove existing signing where indicated in on plans.

13. The contractor shall inventory all signs to be removed or covered and note damaged signs to the Engineer at the time of covering or removal. All signs damaged by covering or removal shall be replaced by the contractor at the contractors expense.

NOTES:

ENVIRONMENTS & EXPERIENCES

merje

120 North Church Street
Suite 208
West Chester, PA 19380
T 484.266.0648
www.merjedesign.com

DATE January 8, 2015

DRAWN BY: JC/PR

These drawings are meant for DESIGN INTENT ONLY and are not for construction. Contractor shall verify and be responsible for all dimensions and conditions of the job. Contractor shall be familiar with the site and conditions it presents. This office must be notified of any variations from the dimensions and conditions shown on this drawing. Shop drawings and details must be submitted to this office for approval prior to proceeding with fabrication. All copy shall be proofread by client and legal requirements checked by legal department.

REVISIONS

February 10, 2015

August 2016

CLIENT / PROJECT

Lake Havasu City Wayfinding Program

PROJECT NO.

SHEET TITLE

Performance Specifications

SHEET NO.

F.2

PART 2 – PRODUCTS

2.01 QUALITY ASSURANCE

A Materials used for this project shall be new and not reconditioned or re-purposed.

B Fabricator shall be familiar with the site and all conditions related to the fabrication and installation of the project.

C Use only personnel thoroughly skilled and experienced with the products and method for fabrication and installation of signage specified.

D The owner shall reserve the right to reject any shop drawings, samples or other submittals, as well as any finished product or installation, than cannot meet the standard of quality established. Any such decision will be considered final and not subject to recourse.

E The intent of the contract documents is to provide everything necessary for a complete contract. In the event of conflict or omission, the fabricator shall consult the owner for resolution.

F Materials and hardware not specified, but necessary to the complete functioning of the sign, shall conform to the quality level established.

2.02 PREFERRED MATERIAL SUPPLIERS

Vendors and products listed below are specified for this product. These products have either been tested on prior projects and have delivered proven results, or have properties unique to this project. Any suggested substitutions must have documentation demonstrating the same level of quality and warranty PRIOR to bidding. Bids are subject to disqualification if unauthorized substitutions are used.

A Acrylic Polyurethane paint

Matthews Paint (a division of PPG), Delaware, OH 43015

Phone: 800-323-6593

www.matthewspaint.com

B All vinyl and vinyl coatings

3M Commercial Graphics Division, St.Paul, MN 55144

Phone: 888-364-3577

www. solutions.3m.com

C Wire Mesh

McNichols Co., Phoenix, AZ 85040

Phone: 1-800-237-3820

www.mcnichols.com

2.03 DESIGN REQUIREMENTS

A Typeface specifications

1 Typeface (or fonts) are purchased from respective font websites, licensed to the designer, and will not be shared with the fabricator. Fabricators will be responsible for purchasing matching licensed fonts for project usage.

2 Size: all letter heights specified are based on the cap height of the capital letter.

3 Alignment: When setting type or installing cut letters, ensure that letters are perfectly straight and even, with no characters set crooked or "popping up."

4 Spacing

a) See the Graphics Standards section of the design intent drawings for the samples of letterspacing programs. The proper letter and word spacing is of extreme importance to the desired look of the signs.

b) Contractor is responsible for visual corrections to the typesetting that might be necessary. Any problems in spacing or copyfitting should be brought to the attention of the designer for solution.

B Visual justification

1 Display type may align mechanically but not optically. When flushing copy message left, a visual adjustment shall be made compensating for arrows and those letter forms that must be extended into the left hand margin to appear flush. For example, S and O must extend beyond the left margin slightly.

C Arrow and symbol specifications

1 Symbols: Symbols and pictographs shall conform to the symbol signs issued by the Department of Transportation and the American Institute of Graphic Arts. To obtain more information and digitized Macintosh (EPS) compatible AIGA symbols, contact: Society for Environmental Graphic Design (SEGD), 1000 Vermont Ave., NW, Suite 400, Washington, DC 20005, Phone: 202-638-5555.

2 Arrows: Arrows on all signs shall use the arrow files which will be provided by the owner to the successful bidder.

a) Arrow size will be dimensioned by height as shown in the design intent drawings.

D Artwork

1 The contractor shall be provided electronic Adobe InDesign and Illustrator files with the project artwork and templates. The final output quality of the artwork for finished signage shall be the responsibility of the contractor. The owner's representative reserves the right to reject artwork if it fails to meet the standard of quality established.

2.04 MATERIALS

A Aluminum extrusions: For mounting plates and structural frames shall conform to ASTM B-221, alloy 6063-T6. Shapes, sizes and weights of members shall be as required for structural stability. All connections of aluminum members shall be heli-arc welded, continuous fillets, ground smooth on all exposed surfaces, unless specifically detailed otherwise. Aluminum finishes shall be hereinafter specified.

B Aluminum sheet and plate: Type 5052-H-32 alloy aluminum, thickness as indicated. For painted finish, faces shall be etched to give an even stain finish and remove oxidation, then conversion coated to improve paint adhesion and inhibit corrosion. Surface shall be belt-sanded for a smooth finish, edges filed and ground then immersed in hot alkaline cleaner to remove contamination. For anodized finish, prepare for finish AA-M31-C21-A31. Aluminum should have consistency of color and finish throughout the project.

C Stainless Steel sheet: Chromium stainless steel sheet. Use type 304 or type 316 austenitic stainless steel with 16% chromium and 10% nickel.

D Hangers, brackets and accessories: Shall be of the type and size indicated. Where such items are not specifically called for, provide hangers, brackets and accessories as required for the proper execution of the work, as approved by the owner.

E Paint for aluminum: All coating to protect aluminum by uniformly penetrating, filling, and sealing surface pores. Coating should provide an invisible barrier to weathering, airborne contaminants, graffiti, industrial air pollution, mildew, and salt air. Coating should not yellow, peel or flake. *Coating should be guaranteed in conformance with Warranty Section 1.10-E.* ***Sign panels shall be pre-drilled in proper locations before any priming, painting or coating processes.*** Aluminum should have consistency of color and finish throughout the project.

1 **Matthews Acrylic Polyurethane (PPG)**

MAP® is a superior two-component catalyzed coating system that provides a high degree of ultraviolet, chemical and weather protection for signage and architectural metals. When used as a a complete system, primer through topcoat, MAP provides a high performance finish that lasts for years.

a) Pretreatment: Mechanically clean and chemically pretreat fabricated items in accordance with coating manufacturer's requirements and AAMA requirements for finish indicated.

1) Pretreatment: One coat 74-734 and 74-735 metal pre-treat at .25 mils DFT or one coat 74-793 spray bond at .15 to .25 mils DFT.

b) Apply primer and finish coats in accordance with coating manufacturer's requirements for finish indicated.

1) Finish coat: One coat Matthews Acrylic Polyurethane 2 mils DFT. As a final step, spray one coat of satin clear Matthews Acrylic Polyurethane 2 mils DFT for a protective top coat.

F Pressure Sensitive Vinyl Legends

1 Use **3M High Intensity Prismatic Reflective Sheeting Series 3930,** with **3M ElectroCut Film 1170 overlaminate.**

a) Custom color background and characters printed with 3M inks directly.

b) Series 3930 sheeting incorporates a pressure sensitive adhesive and should be applied to the sign substrate at temperature of 65˚F/18˚C or higher by any of the following methods:

1) Mechanical squeeze roll applicator – refer to 3M Information Folder (IF) 1.4 for more details.

2) Hand squeeze roll applicator – refer to 3M IF 1.6 for more details.

NOTES:

ENVIRONMENTS & EXPERIENCES

merje

120 North Church Street
Suite 208
West Chester, PA 19380
T 484.266.0648
www.merjedesign.com

DATE January 8, 2015

DRAWN BY: JC/PR

These drawings are meant for DESIGN INTENT ONLY and are not for construction. Contractor shall verify and be responsible for all dimensions and conditions of the job. Contractor shall be familiar with the site and conditions it presents. This office must be notified of any variations from the dimensions and conditions shown on this drawing. Shop drawings and details must be submitted to this office for approval prior to proceeding with fabrication. All copy shall be proofread by client and legal requirements checked by legal department.

REVISIONS

February 10, 2015

August 2016

CLIENT / PROJECT

Lake Havasu City Wayfinding Program

PROJECT NO.

SHEET TITLE

Performance Specifications

SHEET NO.

F.3

PART 2 – PRODUCTS *continued*

c) Splices: Series 3930 sheeting must be butt spliced when more than one piece of sheeting is used on one piece of substrate. The sheeting pieces should not touch each other. This is to prevent buckling as the sheet expands in extreme temperature and humidity exposure.

d) For traffic sign use, substrates found to be most reliable and durable are properly prepared aluminum sheets and extrusions. Plastic substrates are NOT acceptable.

e) High intensity prismatic sheeting may be processed into traffic signs by any of the imaging methods describe below:

1) Screen Processing: Series 3930 sheeting may be screen processed into traffic signs before or after mounting on a sign substrate, using 3M Process Colors Series 880I or Series 880N. Refer to 3M IF 1.8 for more details.

2) Thermal Transfer Printing: Series 3930 sheeting may be imaged with 3M Thermal Transfer Ribbon Series TTR2300 in conjunction with the Matan SprinG3 or Matan Spot4 thermal transfer printers. Additionally, series 3930 sheeting may be imaged by the Durst RHO 161 TS printer, by Sherine Industries: (604) 513-1887. All applications utilizing the above printers must be covered with 3M ElectroCut Film 1170 Clear UV/ Anti-Graffiti overlaminate.

3) 3M ElectroCut Film Series 1170 may be used to provide transparent colored background copy for traffic control signs on high intensity prismatic sheeting. Both materials then must be covered with 3M ElectroCut Film 1170 Clear UV/Anti-Graffiti overlaminate. Refer to Product Bulleting 1170 for fabrication procedures.

4) Vinyl Graphic Films: Scotchcal Vinyl Series 7720 and Series 7725 may be used to provide copy for traffic control signs on high intensity prismatic sheeting. Both materials then must be covered with 3M ElectroCut Film 1170 Clear UV/Anti-Graffiti overlaminate. Refer to Scotchcal product literature for more information.

f) All of the above methods utilizing series 3930 reflective sheeting must be warranted for a period of eight (8) years and shall not excessively fade, discolor, crack, craze, peel, blister or lose reflectivity such that the signs become visually unsuitable for their intended purpose.

2 Use **3M Scotchcal brand graphic film.** Material shall consist of a tough, flexible, and pigmented vinyl film and shall be processed with compatible screen printing inks and clear coatings as recommended by the film manufacturer. The film shall be precoated with pressure-sensitive adhesive. The adhesive shall be protected by a treated paper liner which shall be easily removable without soaking in water or other solvents. The sheeting shall be guaranteed against delamination for a period of 5 years.

3 Use **3M Scotchlite brand reflective graphic film.** Material shall consist of transparent plastic having a smooth, flat outer surface embedded with spherical lens elements. Material shall be capable to being processed with compatible screen printing inks and clear coatings as recommended by the film manufacturer. The film shall be precoated with pressure-sensitive adhesive. The adhesive shall be protected by a treated paper liner which shall be easily removable without soaking in water or other solvents. The sheeting shall be guaranteed against delamination for a period of 5 years.

G Concrete

1 All concrete footers are to be poured in place.

2 All concrete footers are to be poured from thoroughly mixed and agitated concrete in order to prevent unreasonable voids in the finished casting.

3 Concrete to meet specified "PSI testing" for strength: 3500 PSI minimum.

4 Concrete to meet specified "slump test" before pouring footing.

NOT PART OF THIS CONTRACT, INSTALLATION BY OTHERS

specifically identified, or called out in the sign drawings.

9 Smooth-Formed Finished Concrete: Form-facing panels that will provide continuous, true, and smooth concrete surfaces. Furnish in largest practicable sizes to minimize number of joints.

a) Plywood, metal, or other approved panel materials.

b) Exterior-grade plywood panels, suitable for concrete forms, complying with DOC PS 1.

H Breakaway post: Manufacturer shall provide breakaway posts for the sign types and locations indicated in the documentation drawings. Final designs and shop drawings shall be supplied by the fabricator for each of the poles identified. A Professional Engineer shall sign and seal the submittal of shop drawings. The breakaway post shall meet or exceed the following criteria:

1 Most Current policy on Geometric Design of Highway and Streets.

2 Most Current Standard Specification for Structural supports for Highway Signs, Luminaries and Traffic Signals.

3 Most Current AASHTO Roadside Design Guide.

I Adhesive tape: Use closed-cell foam type tape with adhesive surfaces on both faces. Thicknesses and widths of tapes shall be as required to safely secure signs to various wall finishes, but in no case shall be less than 1/16 inch thick and 1/2 inch wide. Adhesive tape shall be equal to Norton Sealant Tape No. 1001 Series.

J Liquid adhesive: Use Silicone Silastic 732 RTV adhesive sealant as manufactured by Dow Corning.

2.05 FABRICATION

A Report any discrepancies between drawings, specifications and owner requirements, and request direction from owner before proceeding.

B Verify measurements in field as required for work fabricated to fit job conditions. Before starting work, examine adjoining work on which work of this section is in any way dependent for perfect workmanship and fit.

C Make work in ample time not to delay job progress and deliver to job at such time as required for proper coordination. Fabricate work true to line and detail with clean, sharply defined profiles. Finish surfaces smooth unless otherwise specified.

D Do cutting, punching, drilling and tapping required for attachment or other work coming in contact with signage work where indicated.

E Changeability: Fabricate signs in such a manner that each of the major mounting components may be removed and replaced with similar components by maintenance personnel, but not by unauthorized personnel.

F Construction: Fabricate all joints, corners, miters, etc., with work accurately machined, filed and fitted, rigidly framed together at joints and contact points. Carefully match all work to provide a perfect continuity of lines and design, with metal in contact having hairline joints. Make joints of such character and assembly to be strong and as rigid as adjoining sections. Make exposed joints where joint is least conspicuous. Corners shall be square as indicated. All edges shall be finished and free of saw marks.

Allow for expansion and contraction of materials from temperature changes, especially when two materials with different coefficients of expansion are used together.

Detail signs to minimize deflection from snow, ice, water and their own weight.

G Engineering: The system shall be engineered to eliminate buckling of any members, failure at any points, distortions or other damage. The system shall be engineered to be rigid with minimum deflection and rotation under stress and shall be able to withstand movement, shear and torsional loads. Exposed areas of signs shall not oil can. Signs shall be designed as structurally self-supporting units. The suspension systems and substructure shall be designed by the sign manufacturer to perform in accordance with the contract documents.

H Connections and accessories: Weights of connections and accessories shall be adequate to sustain and withstand stresses and strains to which they will be normally subjected.

I Sign panels - General

1 Surface finish: Provide surface finishes that are free from lines, mottling, ridges, variations in color, peeling, orange peel, bubbles, pinholes, mottling, crazing, grit and coarse particles. This applies to all methods of fabrication and finishing. Use clear coatings for durability, surface protection, appearance and maintenance.

NOTES:

ENVIRONMENTS & EXPERIENCES

merje

120 North Church Street
Suite 208
West Chester, PA 19380
T 484.266.0648
www.merjedesign.com

DATE January 8, 2015

DRAWN BY: JC/PR

These drawings are meant for DESIGN INTENT ONLY and are not for construction. Contractor shall verify and be responsible for all dimensions and conditions of the job. Contractor shall be familiar with the site and conditions it presents. This office must be notified of any variations from the dimensions and conditions shown on this drawing. Shop drawings and details must be submitted to this office for approval prior to proceeding with fabrication. All copy shall be proofread by client and legal requirements checked by legal department.

REVISIONS

February 10, 2015

August 2016

CLIENT / PROJECT

Lake Havasu City Wayfinding Program

PROJECT NO.

SHEET TITLE

Performance Specifications

SHEET NO.

F.4

PART 2 – PRODUCTS *continued*

2 Material: Sign panel material is stated in the schedules under "Notes" and/or "Specifications" and/or on drawings.

3 Opacity: All signs shall have opaque background and opaque graphics, unless specifically noted otherwise.

J Anchors and fastenings

1 Mechanical

a) Provide anchors and fasteners required to secure work in place.

b) Surface finish: Do NOT expose fastenings on surface of sign panels unless specifically noted otherwise. Do NOT deform, distort or discolor sign face surfaces by attachment of concealed fastenings.

c) Corrosion resistance: all fastenings shall be non-corrosive and resistant to oxidation or other corrosive action, of the same composition completely through their cross sections, particularly when used below grade. Use highest quality stainless steel hardware and fasteners.

d) Anchors, inserts or fasteners shall be compatible with sign materials, shall not result in galvanic action or chemical interaction of adhesives and shall have demonstrable and sufficient strength for intended use.

e) Steel anchors and fastenings for exterior use shall be galvanized in accordance with ASTM A153.

f) Stability: Fabricate and install signs with fastenings to withstand all actions imposed by use; **90 mph wind** perpendicular to surfaces, water, ice, snow loads and similar forces.

g) Anchor bolts in concrete shall be cast in place. Manufacturer shall furnish instructions for the setting of anchors and bearing plates. Manufacturer shall ascertain that the items are properly set during the process of the work.

h) Color: Secure work with fastenings of same color and finish as the components they secure where they are exposed to view, unless noted otherwise.

i) Security: All exposed fasteners must be vandal resistant and have vandal-proof "spanner" type slots to be removed only with the special driver head.

K Messages

The fabricator is responsible for the message layout of all directional messages panels. Fabricator must produce scale drawings of message layouts for review prior to fabrication. Layout spacing and letterheights to be based on typical layout guideline drawing pages.

1 Layout: Typical sign panel layouts are illustrated in the design intent drawings. All messages including braille shall be flush left, unless noted otherwise. Correct line breaks are indicated in the "message" column of the schedule and should be followed exactly. Braille line breaks shall match those of the raised copy.

Any problems in the message layout shall be brought to the attention of the designer for a solution.

2 Fabrication: Execute all signs such that letter forms are true and clean. Letter forms with rounded corners, or chipped, nicked, cut or ragged edges, will not be accepted. This applies to all methods of fabrication and copy application.

3 Copy: Message copy on detail drawings is for layout purposes only. Actual copy is listed in the "message" column of the schedule. Certain copy may be provided later by the owner.

4 Capitalization: Directions for upper and lower case are found in the "message" column of the schedule must be followed exactly.

5 Single- or double-faces: All signs that are double-faced will be noted as such in the drawings and message schedule. For double-faced signs, the message will be indicated as "Side A" and "Side B" or "Side C" and Side D".

L Surface-applied messages

1 Reflectivity and specular gloss

a) Non-reflectorized message: 60 degree specular in accordance with ASTM Test D523.

2 Thickness: as indicated in specifications herein.

3 Color and color fastness

a) Exposed surfaces and finishes shall show no discernible color change or chalking when exposed for 1,000 hours in an Atlas Twin Arc Weathermaster Model HCDL-X, or equivalent, when tested in accordance with ASTM D822.

4 Inter letter spacing: Follow examples in drawings. Show sample inter-letter and inter-word spacing in sample submissions as specified.

5 Layout: Positions for all messages, symbols, arrows, lines, etc., for all signs are clearly indicated on the drawings and shall be complied with.

6 Artwork: Contractor shall be responsible for all final reproduction artwork for all messages, symbols, arrows, lines, and location plan and/or floor plan drawings.

7 Fabrication

a) Screened messages: Execute all silk screen printing in such a manner that all edges and corners of finished letter forms are true and clean. Letter forms, color areas or lines with rounded corners, edge buildup or bleeding, sawtoothing, etc., will not be accepted. Execute all silk screening from photo-screens prepared from typesetter's reproduction of the copy specified. All above work is included is this contract. Hand cut screens will not be acceptable.

b) Die-cut messages: Die-cut, pre-spaced, pre-aligned messages (numbers, words, phrases, and arrows) from 3.0 MIL flexible film coated with continuous adhesive pressure sensitive backing to meet characteristics specified for surface-applied messages. Execute die-cutting in such a manner that all edges and corners of finished letter forms are true and clean. Letter forms with round positive or negative corners, nicked, cut or ragged edges, etc., will not be acceptable.

M Electrical Components, Devices, and Accessories: Listed and labeled as defined in NFPA 70, Article 100, by a testing agency acceptable to authorities having jurisdiction, and marked for intended use.

NOTES:

ENVIRONMENTS & EXPERIENCES

merje

120 North Church Street
Suite 208
West Chester, PA 19380
T 484.266.0648
www.merjedesign.com

DATE January 8, 2015

DRAWN BY: JC/PR

These drawings are meant for DESIGN INTENT ONLY and are not for construction. Contractor shall verify and be responsible for all dimensions and conditions of the job. Contractor shall be familiar with the site and conditions it presents. This office must be notified of any variations from the dimensions and conditions shown on this drawing. Shop drawings and details must be submitted to this office for approval prior to proceeding with fabrication. All copy shall be proofread by client and legal requirements checked by legal department.

REVISIONS

February 10, 2015

August 2016

CLIENT / PROJECT

Lake Havasu City Wayfinding Program

PROJECT NO.

SHEET TITLE

Performance Specifications

SHEET NO.

F.5

PART 3 – EXECUTION

3.01 INSPECTION

A Examine the substrates and conditions under which the signs are to be installed and notify the owner in writing of conditions detrimental to the proper and timely completion of the work. Do not proceed with the work until unsatisfactory conditions have been corrected.

3.02 INSTALLATION

A Install sign units and components with concealed fasteners, unless otherwise shown. Refer to detail drawings for general method. Verify each surface in field to determine specific, appropriate hardware.

Drawings in this package may not indicate any below-ground or in-wall structural tie-ins or connections that may be necessary to assure stable and secure installation of signs. Sign fabricator is responsible for determining where such connections are necessary and for coordinating with related trades to make them.

B Locations: Refer to drawings for approximate locations. Any discrepancies or apparent deviations from drawing locations because of different site conditions shall be brought to the attention of the owner for solution. The owner must be present for field placement of the sign.

It shall be the responsibility of the Contractor to determine location of underground structures and utilities by the use of test pit excavation prior to excavation operations. Test pits shall be the size, depth and location as approved by the Engineer. Each pit shall be tamp-back-filled. Test pit excavation will be measured on the basis of the volume of material actually removed from within the limits specified. Tamped backfill will not be measured but shall be included in the price bid for test pit excavation.

Price provided shall include all excavation, tamped backfill, labor, tools, equipment and incidentals necessary to complete the installation of each sign.

C For ground-mounted signs, provide whatever replacement concrete, pavers, bricks, etc., are necessary to match adjacent surfaces exactly. Seams should be parallel or perpendicular to sign face and be symmetrical around post(s).

D Note that this area experiences heavy public use. Strong environmental conditions such as weather and vandalism may be routine problems. Signs must be securely mounted. Contractor is responsible for suggesting alternative fabrication or installation methods if required to prevent theft or vandalism.

E Install signs to be level, plumb and at the proper height. Cooperate with other trades for installation of sign units.

F Clean and polish, remove excess adhesive.

G Fixture installation

1 Install lighting fixtures with seals and gaskets. Conceal all wiring in or within the construction.

2 Lamp installation

a) Do not install lamps for permanent use until operating voltage is verified and established.

b) Install lamps in accordance with lamp and fixture manufacturer's instructions.

3 Ballast installation

a) Install ballasts at factory unless specifically indicated otherwise. Mount on rubber grommets or sound isolating details to reduce noise transmission.

3.03 TREE TRIMMING AND PROTECTION

A Include the protection and trimming of trees that interfere with, or are affected by, execution of the Work, whether temporary or new construction.

1 Quality Assurance:

a) Tree Service Qualifications: An experienced tree service firm that has successfully completed tree protection and trimming work similar to that required for this Project and that will assign an experienced, qualified arborist to Project site on a full-time basis during execution of the Work.

b) Arborist Qualifications: An arborist certified by the International Society of Arboriculture or licensed in the jurisdiction where Project is located.

2 Preparation:

a) Install temporary fencing located as indicated or outside the drip line of trees to protect remaining vegetation from construction damage.

b) Protect tree root systems from damage due to noxious materials caused by runoff or spillage while mixing, placing, or storing construction materials. Protect root systems from flooding, eroding, or excessive wetting caused by dewatering operations.

c) Do not store construction materials, debris, or excavated material within the drip line of remaining trees. Do not permit vehicles or foot traffic within the drip line; prevent soil compaction over root systems.

d) Do not allow fires under or adjacent to remaining trees or other plants.

3 Excavation

a) Install shoring or other protective support systems to minimize sloping or benching of excavations.

b) Do not excavate within drip line of trees, unless otherwise indicated.

c) Where excavation for new construction is required within drip line of trees, hand clear and excavate to minimize damage to root systems. Use narrow-tine spading forks and comb soil to expose roots.

1) Relocate roots in backfill areas where possible. If encountering large, main lateral roots, expose roots beyond excavation limits as required to bend and relocate them without breaking. If encountered immediately adjacent to location of new construction and relocation is not practical, cut roots approximately 3 inches back from new construction.

2) Do not allow exposed roots to dry out before placing permanent backfill. Provide temporary earth cover or pack with peat moss and wrap with burlap. Water and maintain in a moist condition. Temporarily support and protect roots from damage until they are permanently relocated and covered with soil.

4 Tree repair and replacement

a) Promptly repair trees damaged by construction operations within 24 hours. Treat damaged trunks, limbs, and roots according to written instructions of the qualified arborist.

b) Remove and replace dead and damaged trees that the qualified arborist determines to be incapable of restoring to a normal growth pattern.

1) Provide new trees of 6-inch caliper size and of a species selected by Designer when trees more than 6 inches in caliper size, measured 12 inches above grade, are required to be replaced.

5 Disposal of waste materials

a) Burning is not permitted.

b) Remove excess excavated material, displaced trees, and excess chips from Owner's property.

3.04 CLEANUP

A Periodically (at least daily) and upon completion of the installation, remove all waste, dirt, wrappings and excess materials, tools and equipment, and carefully and thoroughly clean all surfaces to the satisfaction of the owner.

3.05 PROPERTY DAMAGE

A Protect all adjacent surfaces from damage and pay the cost of repairing any damage to the property caused by delivery or installation of materials. In all cases, match existing surfaces.

NOT PART OF THIS CONTRACT, INSTALLATION BY OTHERS

NOTES:

ENVIRONMENTS & EXPERIENCES

merje

120 North Church Street
Suite 208
West Chester, PA 19380
T 484.266.0648
www.merjedesign.com

DATE January 8, 2015

DRAWN BY: JC/PR

These drawings are meant for DESIGN INTENT ONLY and are not for construction. Contractor shall verify and be responsible for all dimensions and conditions of the job. Contractor shall be familiar with the site and conditions it presents. This office must be notified of any variations from the dimensions and conditions shown on this drawing. Shop drawings and details must be submitted to this office for approval prior to proceeding with fabrication. All copy shall be proofread by client and legal requirements checked by legal department.

REVISIONS

February 10, 2015

August 2016

CLIENT / PROJECT

Lake Havasu City Wayfinding Program

PROJECT NO.

SHEET TITLE

Performance Specifications

SHEET NO.

F.6